MODEL	REV	CHANGE LIST
ZP1 VGA BOARD	1A	First Release
	2A	Reference ECN E200305-1522
	3A	Reference ECN E200307-1199
	3B	Reference ECN E200307-3020
	3C	Reference ECN E200309-0293

Model / Page	ZP1 VGA BOARD FM	ZP1 VGA BOARD TO
1	1A	
2	2A	
3	3B	
4	2A	
5	2A	
6	2A	
7	2A	3C
8	2A	3C
9	1A	
10	1A	
11	1A	
12	1A	3C

Quanta Computer Inc.	PROJECT : ZP1	PCBA NO.35ZP1VB0007	REV:3C	DOC. NO: 204
	APPROVED BY : Jason Liu	CHECK BY: Jason Liu	DRAWING BY: Kent Chen	DATE :08/22/2003 SHEET 1

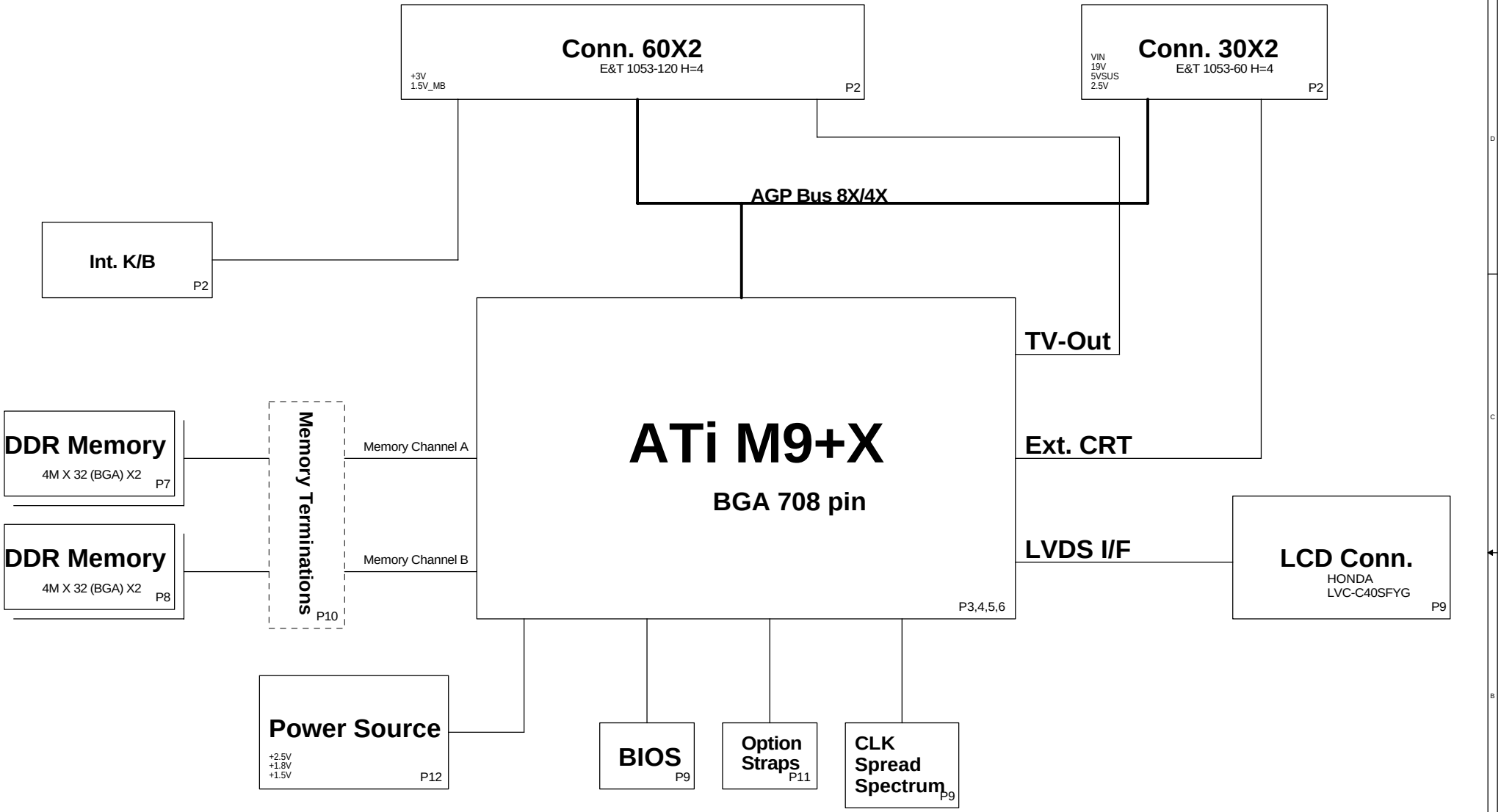

PROJECT : ZP1
Quanta Computer Inc.

Size	Document Number	Rev
Custom	Block Diagram (VGA Daugther/B)	1A

Date: Tuesday, October 28, 2003 Sheet 1 of 12

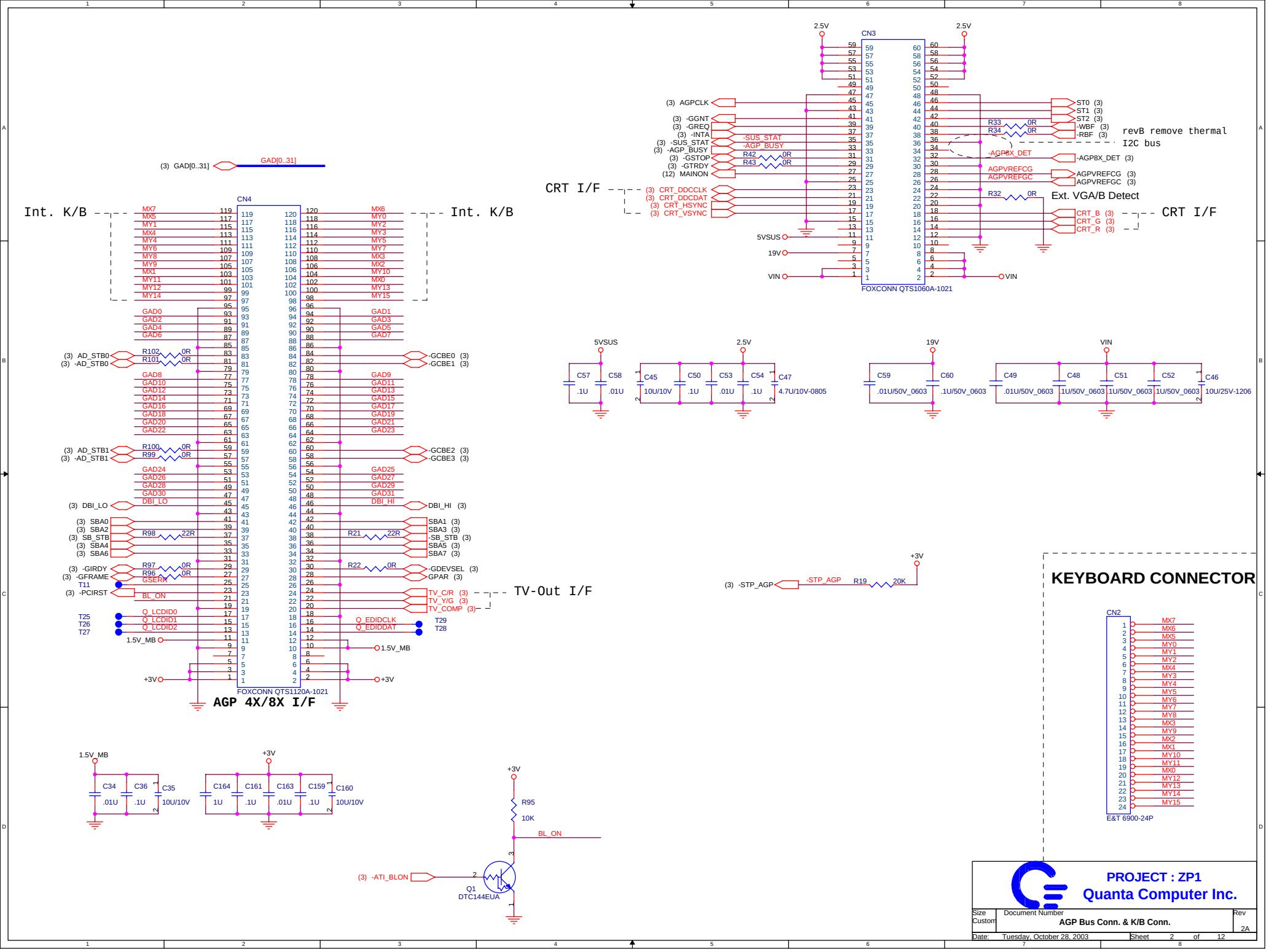
CN3
FOXCONN QTS1060A-1021
CRT I/F
revB remove thermal
I2C bus
Ext. VGA/B Detect
CN4
FOXCONN QTS1120A-1021
AGP 4X/8X I/F
Int. K/B
TV-Out I/F
KEYBOARD CONNECTOR
CN2
E&T 6900-24P
Q1
DTC144EUA
PROJECT : ZP1
Quanta Computer Inc.
Size Custom
Document Number
AGP Bus Conn. & K/B Conn.
Rev 2A
Date: Tuesday, October 28, 2003
Sheet 2 of 12

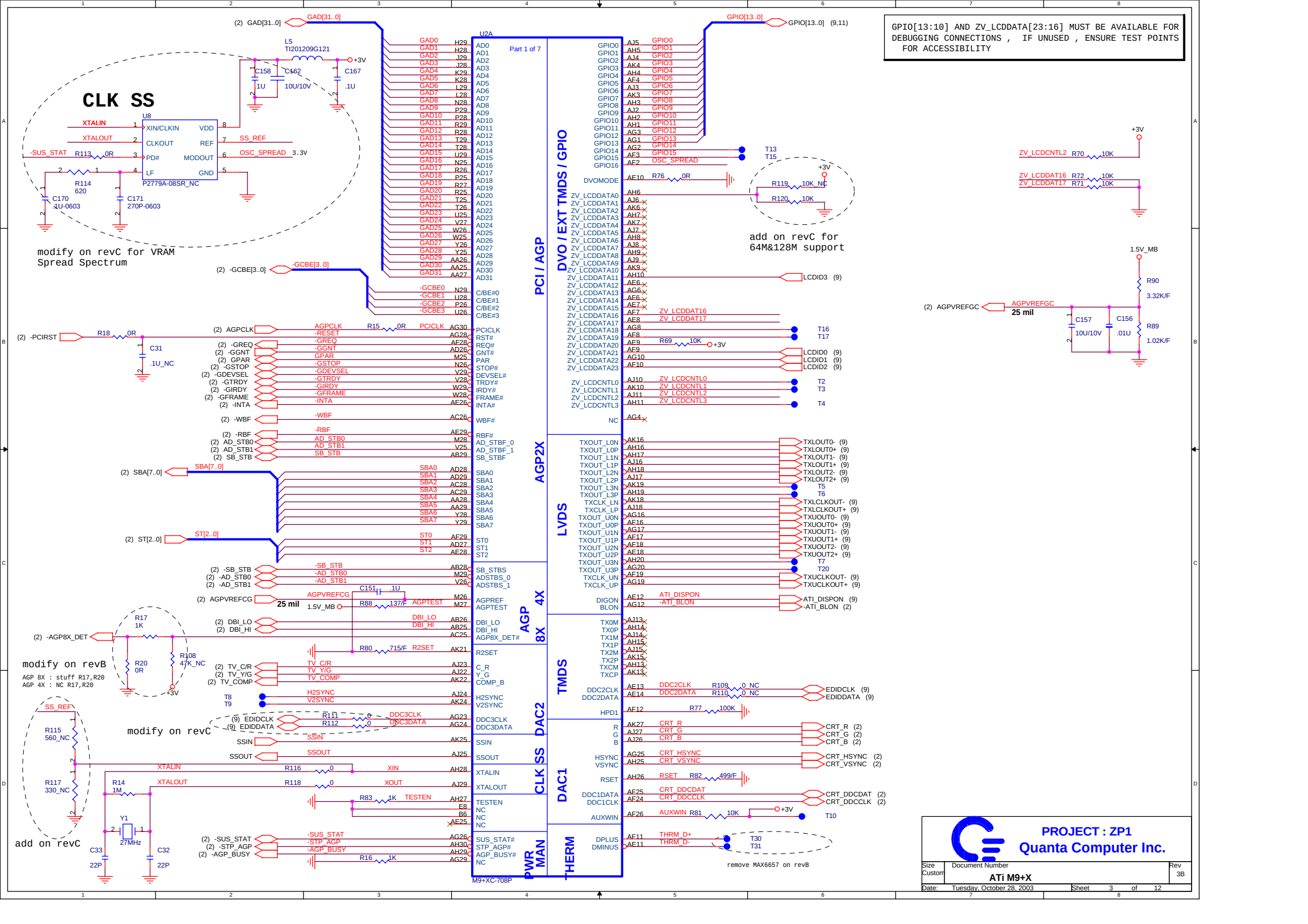
GPIO[13:10] AND ZV_LCDDATA[23:16] MUST BE AVAILABLE FOR DEBUGGING CONNECTIONS , IF UNUSED , ENSURE TEST POINTS FOR ACCESSIBILITY
CLK SS
U8
XIN/CLKIN
CLKOUT
PD#
LF
VDD
REF
MODOUT
GND
P2779A-08SR_NC
XTALIN
XTALOUT
-SUS_STAT
SS_REF
OSC_SPREAD
3.3V
R113 0R
R114 620
C170 .1U-0603
C171 270P-0603
L5 TI201209G121
C158 .1U
C162 10U/10V
C167 .1U
modify on revC for VRAM Spread Spectrum
U2A
Part 1 of 7
PCI / AGP
DVO / EXT TMDS / GPIO
AGP2X
LVDS
AGP 4X
AGP 8X
TMDS
DAC2
CLK SS
DAC1
PWR MAN
THERM
M9+XC-708P
add on revC for 64M&128M support
LCDID3 (9)
LCDID0 (9)
LCDID1 (9)
LCDID2 (9)
ZV_LCDCNTL0
ZV_LCDCNTL1
ZV_LCDCNTL2
ZV_LCDCNTL3
ZV_LCDDAT16
ZV_LCDDAT17
T2
T3
T4
T16
T17
TXLOUT0- (9)
TXLOUT0+ (9)
TXLOUT1- (9)
TXLOUT1+ (9)
TXLOUT2- (9)
TXLOUT2+ (9)
TXLCLKOUT- (9)
TXLCLKOUT+ (9)
TXUOUT0- (9)
TXUOUT0+ (9)
TXUOUT1- (9)
TXUOUT1+ (9)
TXUOUT2- (9)
TXUOUT2+ (9)
TXUCLKOUT- (9)
TXUCLKOUT+ (9)
ATI_DISPON (9)
-ATI_BLON (2)
EDIDCLK (9)
EDIDDATA (9)
CRT_R (2)
CRT_G (2)
CRT_B (2)
CRT_HSYNC (2)
CRT_VSYNC (2)
CRT_DDCDAT (2)
CRT_DDCCLK (2)
remove MAX6657 on revB
modify on revB
AGP 8X : stuff R17,R20
AGP 4X : NC R17,R20
add on revC
ZV_LCDCNTL2 R70 10K
ZV_LCDDAT16 R72 10K
ZV_LCDDAT17 R71 10K
1.5V_MB
R90 3.32K/F
R89 1.02K/F
(2) AGPVREFGC
AGPVREFGC
25 mil
C157 10U/10V
C156 .01U
PROJECT : ZP1
Quanta Computer Inc.
Size Custom
Document Number
ATi M9+X
Rev 3B
Date: Tuesday, October 28, 2003
Sheet 3 of 12

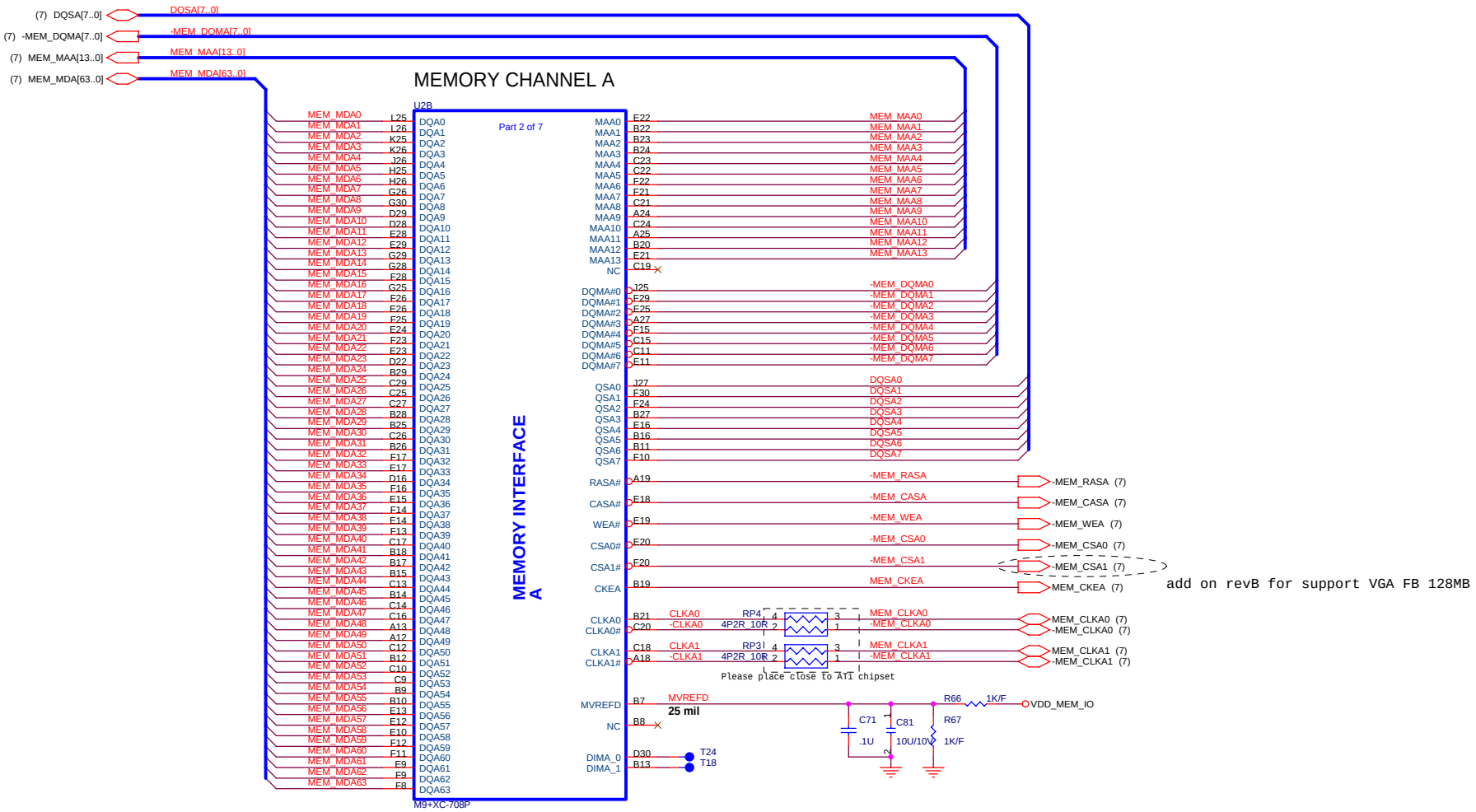

PROJECT : ZP1

Quanta Computer Inc.

Size	Document Number	Rev
Custom	M9+X Memory Bus A	2A

Date: Tuesday, October 28, 2003 Sheet 4 of 12

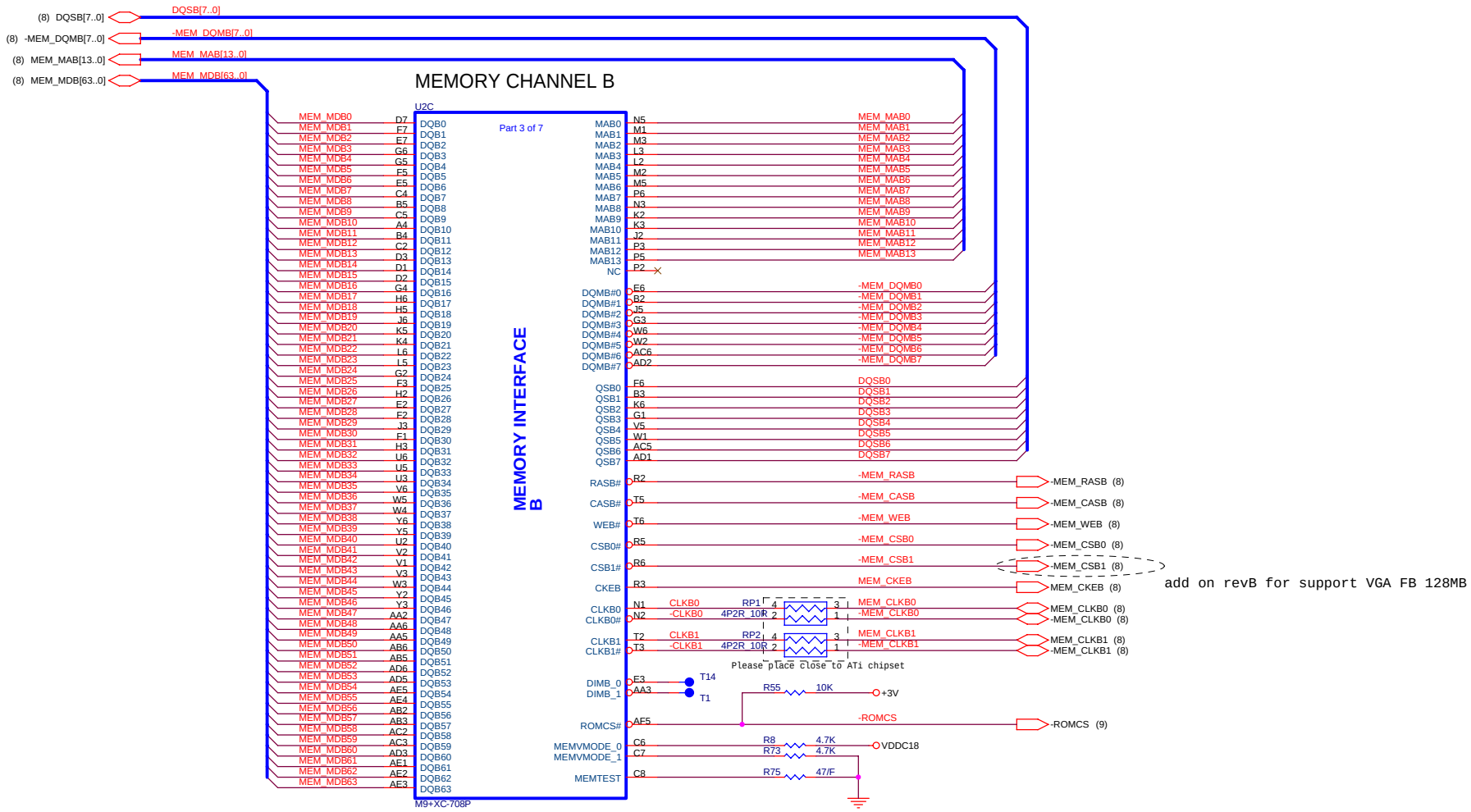

MEMVMODE[1:0]	MEMORY IO VOLTAGE
0 1	2.5V (DDR)
1 0	1.8V (DDR)
1 1	3.3V (SDR)

PROJECT : ZP1
Quanta Computer Inc.

Size	Document Number	Rev
Custom	M9+X Memory Bus B	2A

Date: Tuesday, October 28, 2003 Sheet 5 of 12

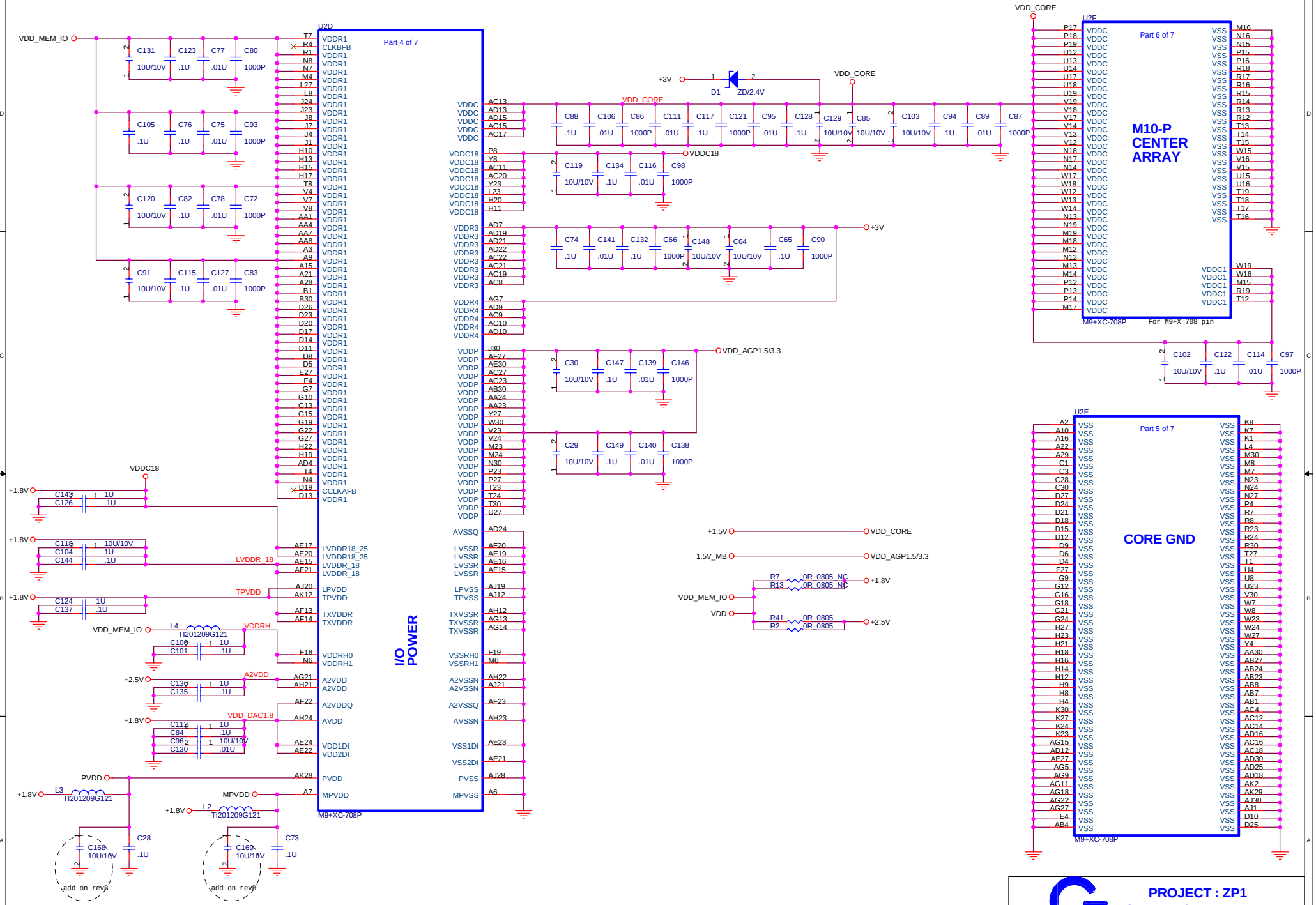
U2D
Part 4 of 7
I/O POWER
M9+XC-708P
VDD_MEM_IO
VDD_CORE
VDDC18
VDD_AGP1.5/3.3
+3V
D1
ZD/2.4V
+1.8V
+2.5V
LVDDR_18
TPVDD
VDDRH
A2VDD
VDD_DAC1.8
PVDD
MPVDD
L4
L3
L2
TI201209G121
add on revB
U2F
Part 6 of 7
M10-P CENTER ARRAY
M9+XC-708P
For M9+X 708 pin
U2E
Part 5 of 7
CORE GND
M9+XC-708P
+1.5V
1.5V_MB
VDD
R7 0R 0805 NC
R13 0R 0805 NC
R41 0R 0805
R2 0R 0805
PROJECT : ZP1
Quanta Computer Inc.
Size Custom
Document Number
M9+X Power
Rev 2A
Date: Tuesday, October 28, 2003
Sheet 6 of 12

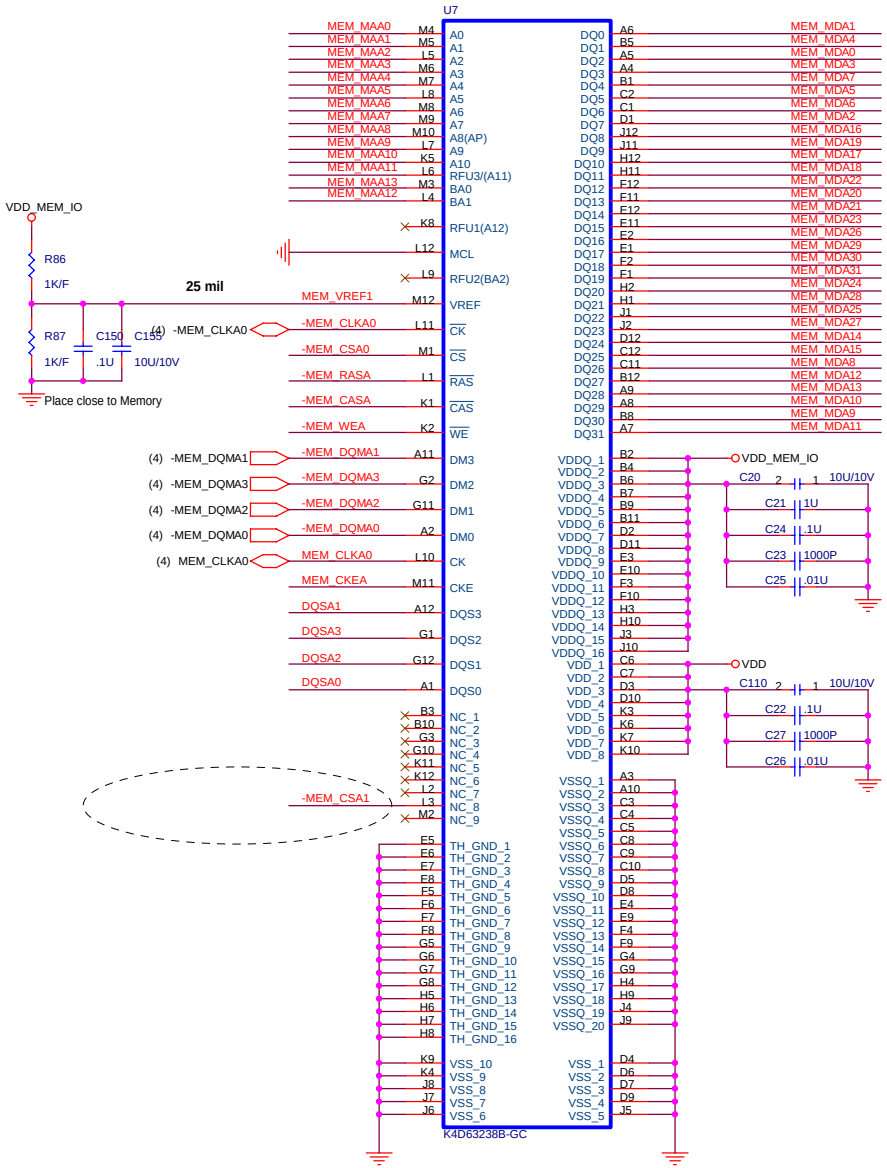

4MX32 DDR BGA Memory

(4) MEM_MAA[13..0] — MEM_MAA[13..0]
(4) MEM_MDA[63..0] — MEM_MDA[63..0]
(4) DQSA[7..0] — DQSA[7..0]

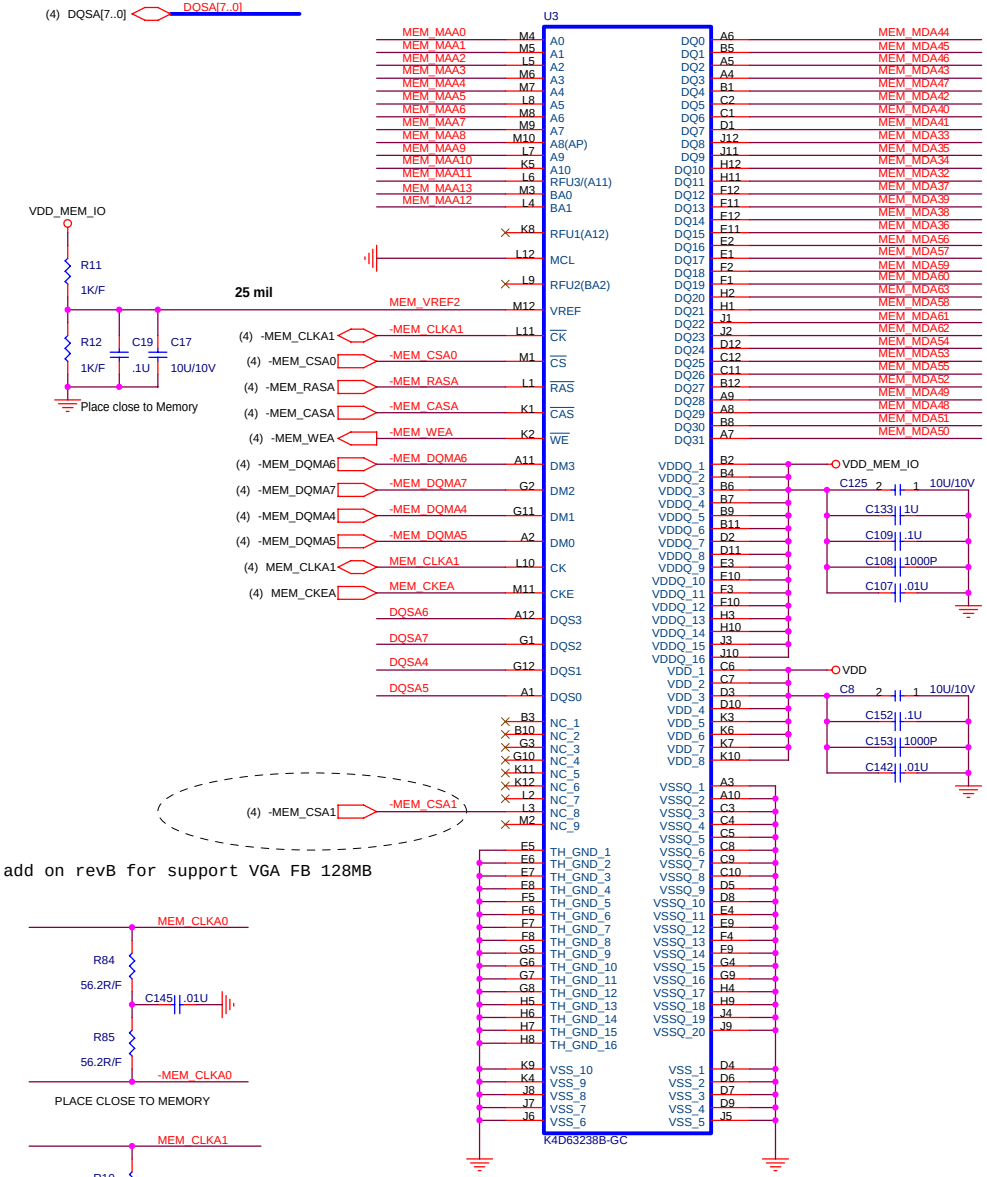

4MX32 DDR BGA Memory

add on revB for support VGA FB 128MB

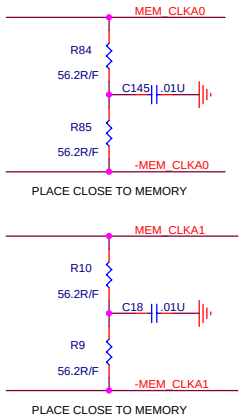

PROJECT : ZP1
Quanta Computer Inc.

Size	Document Number	Rev
Custom	Video DDR Memory A	3C

Date: Tuesday, October 28, 2003 Sheet 7 of 12

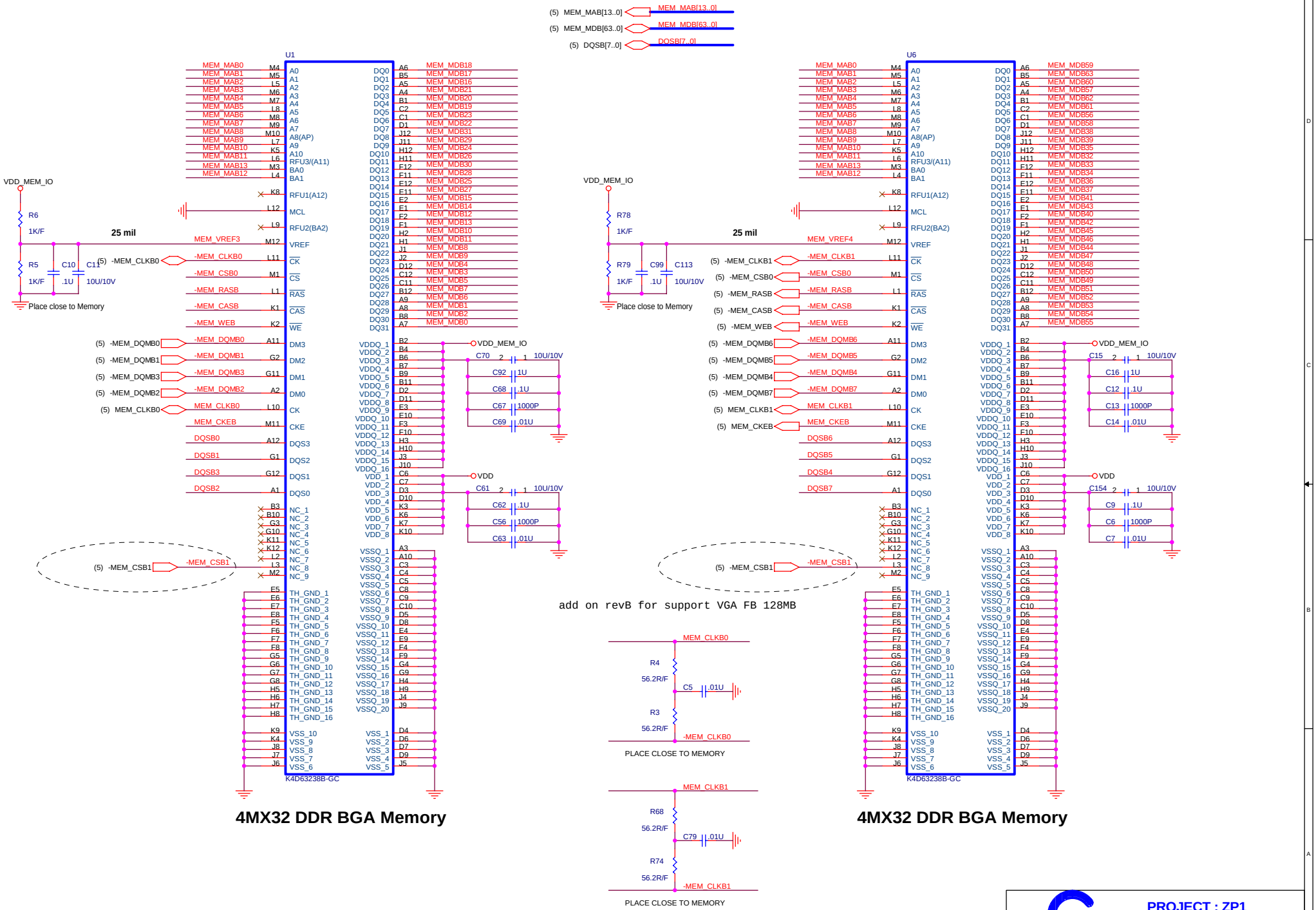
(5) MEM_MAB[13..0]
MEM_MAB[13..0]
(5) MEM_MDB[63..0]
MEM_MDB[63..0]
(5) DQSB[7..0]
DQSB[7..0]
U1
U6
VDD_MEM_IO
R6
1K/F
R5
1K/F
C10
.1U
C11
10U/10V
25 mil
MEM_VREF3
MEM_VREF4
R78
1K/F
R79
1K/F
C99
.1U
C113
10U/10V
Place close to Memory
(5) -MEM_CLKB0
(5) -MEM_CSB0
(5) -MEM_RASB
(5) -MEM_CASB
(5) -MEM_WEB
(5) -MEM_DQMB0
(5) -MEM_DQMB1
(5) -MEM_DQMB3
(5) -MEM_DQMB2
(5) MEM_CLKB0
(5) -MEM_CSB1
(5) -MEM_CLKB1
(5) -MEM_DQMB6
(5) -MEM_DQMB5
(5) -MEM_DQMB4
(5) -MEM_DQMB7
(5) MEM_CLKB1
(5) MEM_CKEB
VDD
C70
C92
C68
C67
C69
C61
C62
C56
C63
C15
C16
C12
C13
C14
C154
C9
C6
C7
K4D63238B-GC
add on revB for support VGA FB 128MB
MEM_CLKB0
R4
56.2R/F
C5
.01U
R3
56.2R/F
-MEM_CLKB0
PLACE CLOSE TO MEMORY
MEM_CLKB1
R68
56.2R/F
C79
.01U
R74
56.2R/F
-MEM_CLKB1
PLACE CLOSE TO MEMORY
4MX32 DDR BGA Memory
4MX32 DDR BGA Memory
PROJECT : ZP1
Quanta Computer Inc.
Size
Custom
Document Number
Video DDR Memory B
Rev
3C
Date: Tuesday, October 28, 2003
Sheet 8 of 12

*** NOTE:THIS BIOS PAGE IS NOT APPLICABLE TO MOTHERBOARD DESIGNS
SO IF NO ROMS ARE USED, LEAVE ROMCS# AS NO CONNECT

LCD INTERFACE

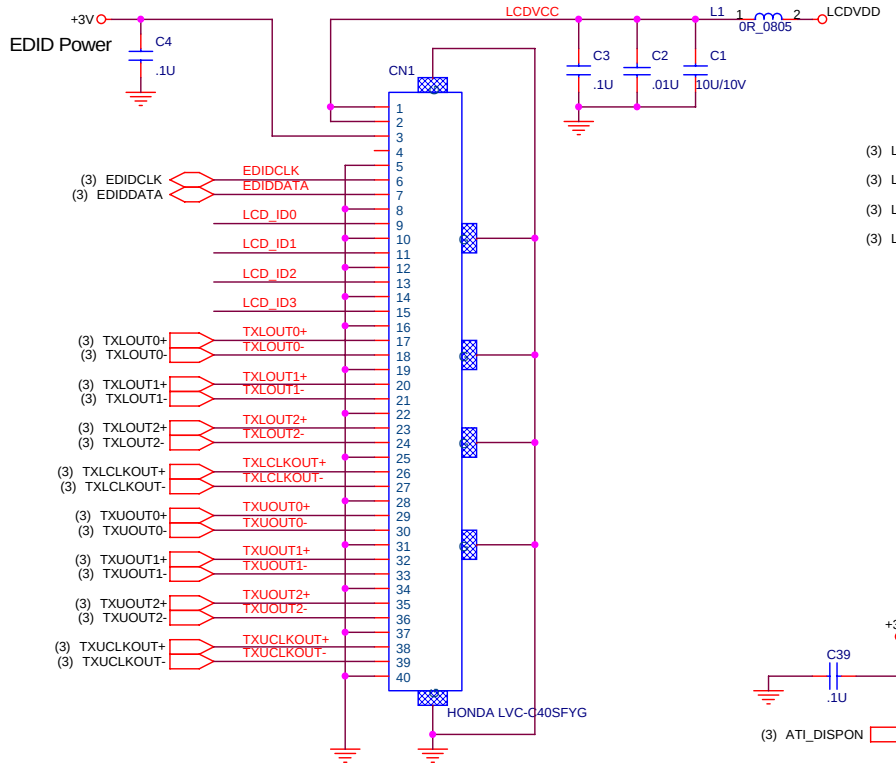

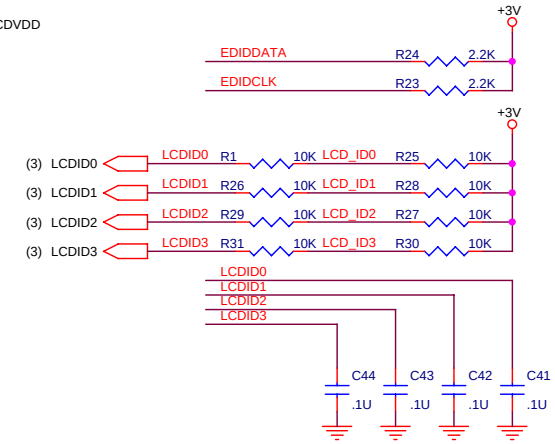

Video BIOS

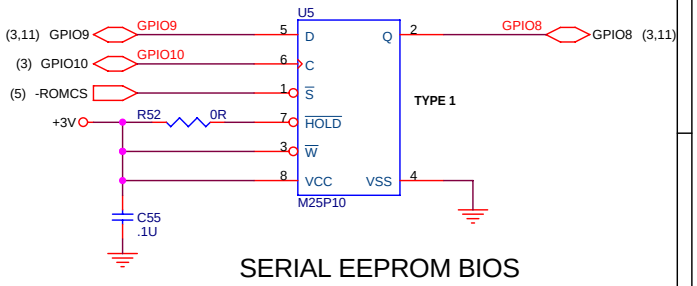

SERIAL EEPROM BIOS

PANEL VCC CONTROL

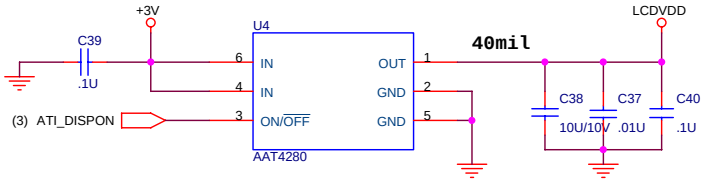

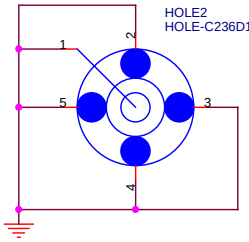

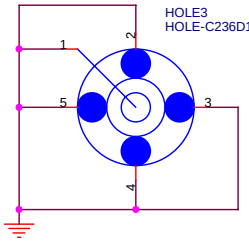

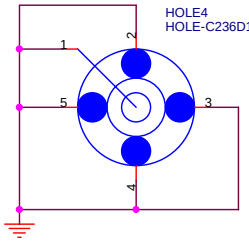

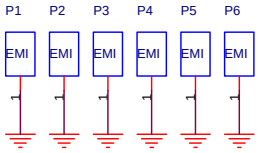

EMIPAD118X177 * 19

PROJECT : ZP1
Quanta Computer Inc.

Size	Document Number	Rev
B	LCD Interface & BIOS & SSC	1A

Date: Tuesday, October 28, 2003 Sheet 9 of 12

TERMINATION FOR MEMORY

CHANNEL A

PARALLEL TERMINATION
PLACE CLOSE TO MEMORIES

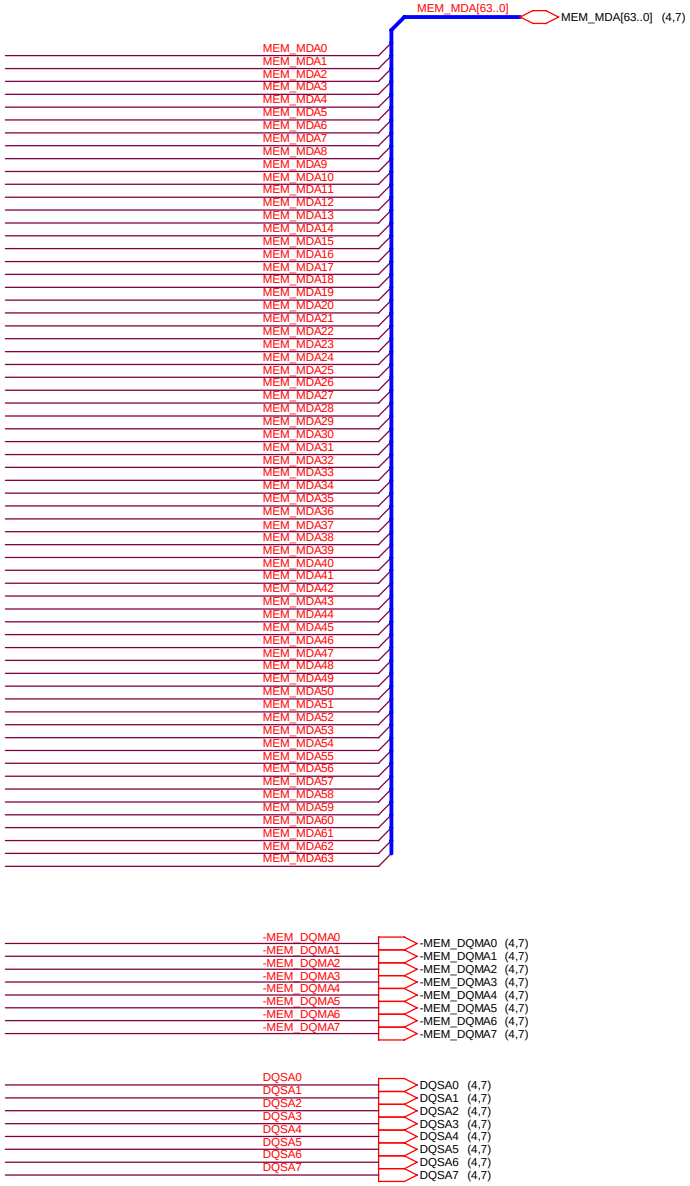

TERMINATION FOR MEMORY

CHANNEL B

PARALLEL TERMINATION
PLACE CLOSE TO MEMORIES

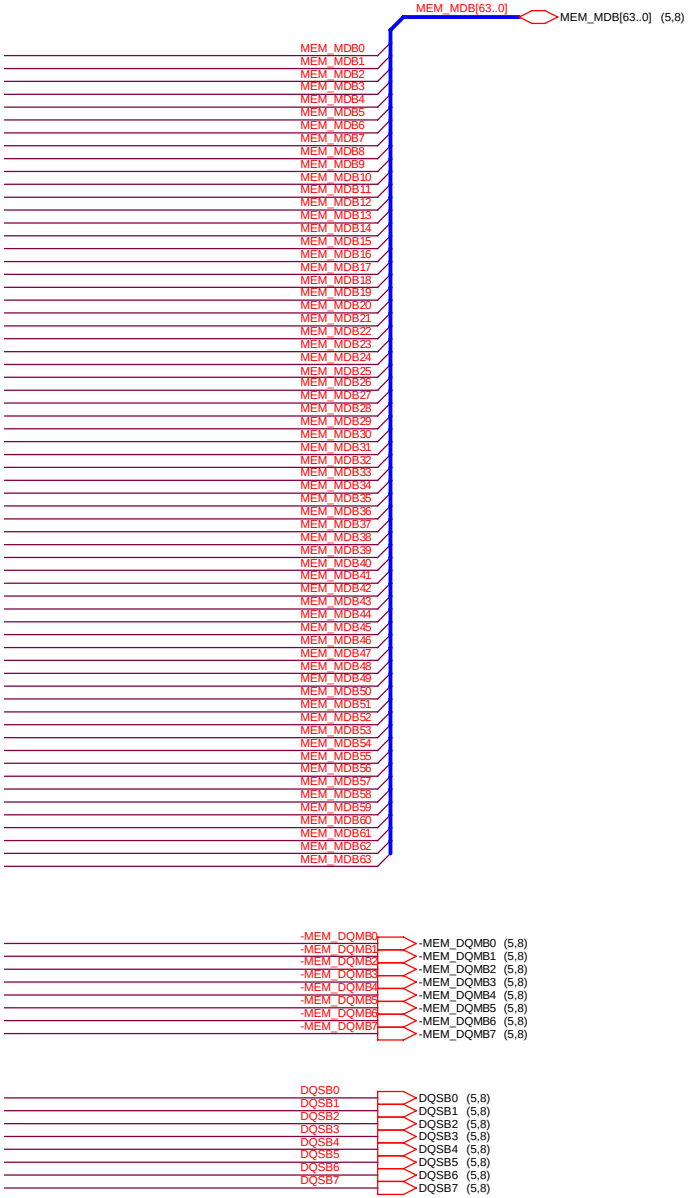

PROJECT : ZP1
Quanta Computer Inc.

Size	Document Number	Rev
Custom	**Memory Bus Termination**	1A

Date: Tuesday, October 28, 2003 Sheet 10 of 12

OPTION STRAPS

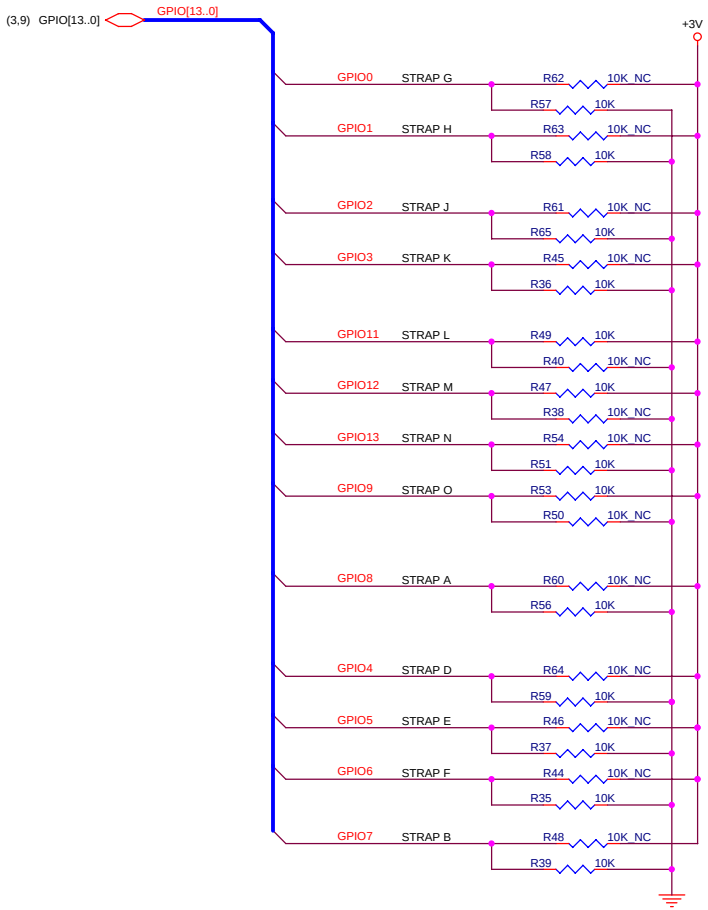

STRAP H	STRAP G	AGP1X CLOCK FEEDBACK PHASE ADJUSTMENT WRT REFCLK (CPUCLK)
LOW	LOW	(DEFAULT) SEE PINOUT SPEC FOR OPTION SETTINGS

STRAP K	STRAP J	AGP CLOCK PHASE ADJUSTMENT BETWEEN X1 AND X2 CLOCK
LOW	LOW	(DEFAULT) SEE PINOUT SPEC FOR OPTION SETTINGS

STRAP O	STRAP N	STRAP M	STRAP L	ROM IDENTIFIER
HIGH	LOW	HIGH	HIGH	(DEFAULT) SEE PINOUT SPEC FOR OPTION SETTINGS

STRAP A	ID DISABLE
LOW	NORMAL OPERATION (DEFAULT)
HIGH	SHUT DOWN

STRAP D	STRAP E	STRAP F	BUS_TYPE
LOW	LOW	LOW	(DEFAULT) SEE PIN BASED STRAPS IN PINOUT SPEC

STRAP B	VGA
LOW	ENABLE (DEFAULT)
HIGH	DISABLE

NOTE: THE M7
SUPPORTS THE USE OF STRAP RESISTORS
(AS AN ALTERNATIVE TO CUSTOMIZED BIOS)
TO CONFIGURE CERTAIN ASPECTS OF THE GRAPHICS
SUBSYSTEM. THE USE OF EXTERNAL STRAPS
PROVIDES ADDED FLEXIBILITY AND EASE OF FUTURE
UPGRADE. STRAPPED VALUES ARE LOADED INTO
INTERNAL REGISTERS ON THE FIRST PCI
COMMAND AFTER RESET# IS INACTIVE.

NOTE:

THE I/O BUFFERS USE INTERNAL PULLDOWN RESISTOR.
THIS DICTATES THE FOLLOWING STRAP
CONFIGURATION:
STRAP TO VCC VIA 10K RESISTOR.
THIS PROVIDES THE LOGIC LEVELS SHOWN:
'0' WHEN 10K RESISTOR NOT INSTALLED
'1' WHEN 10K RESISTOR INSTALLED.

PROJECT : ZP1
Quanta Computer Inc.

Size	Document Number	Rev
Custom	**AGP Bus Straps**	1A

Date: Tuesday, October 28, 2003 Sheet 11 of 12

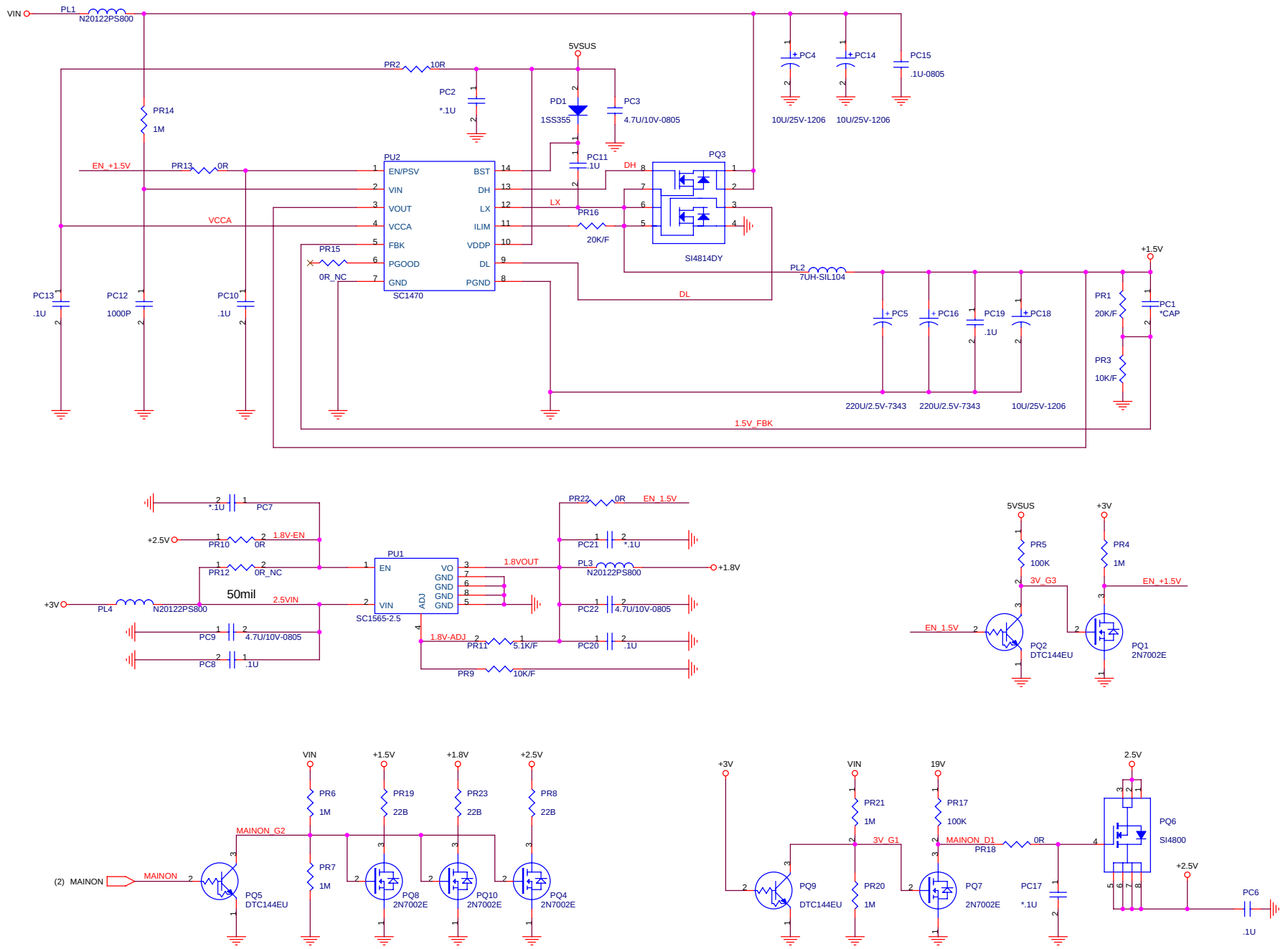

PROJECT : ZP1
Quanta Computer Inc.

Size	Document Number	Rev
Custom	VGA Power Source	3C
Date: Tuesday, October 28, 2003	Sheet 12 of 12	