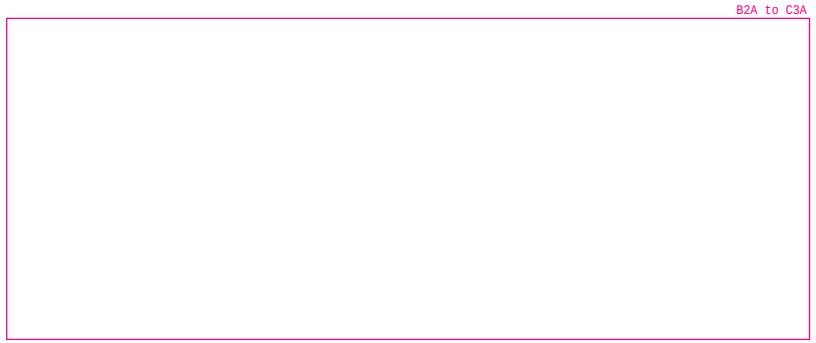

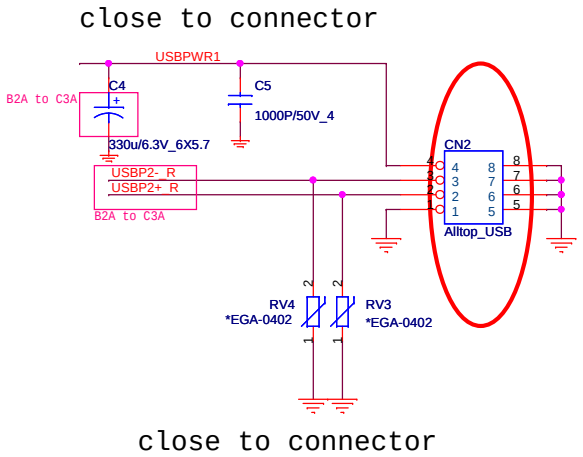

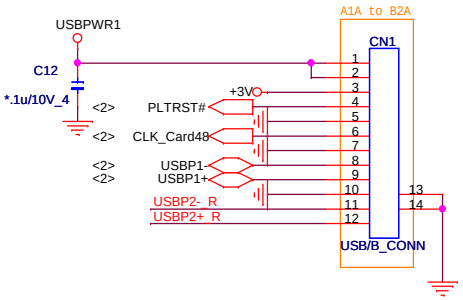

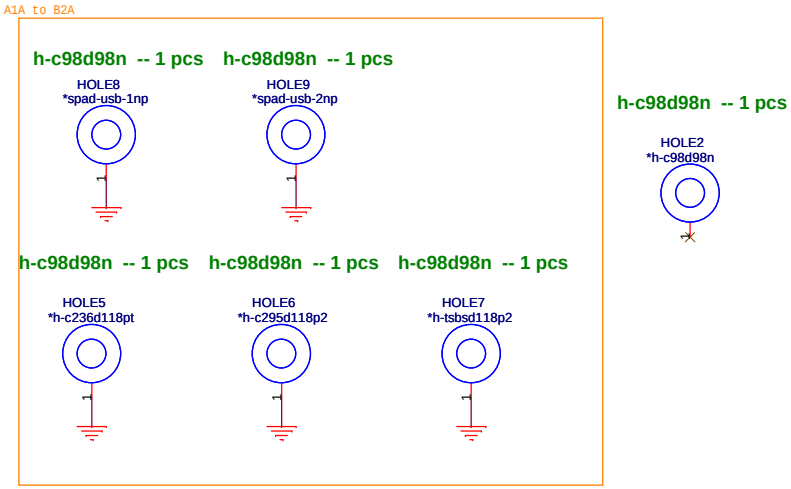

Quanta Computer Inc.

PROJECT : ZK6

Size	Document Number	Rev
	USB_board	1A

Date: Thursday, March 12, 2009 Sheet 1 of 2

CARD-READER Controller

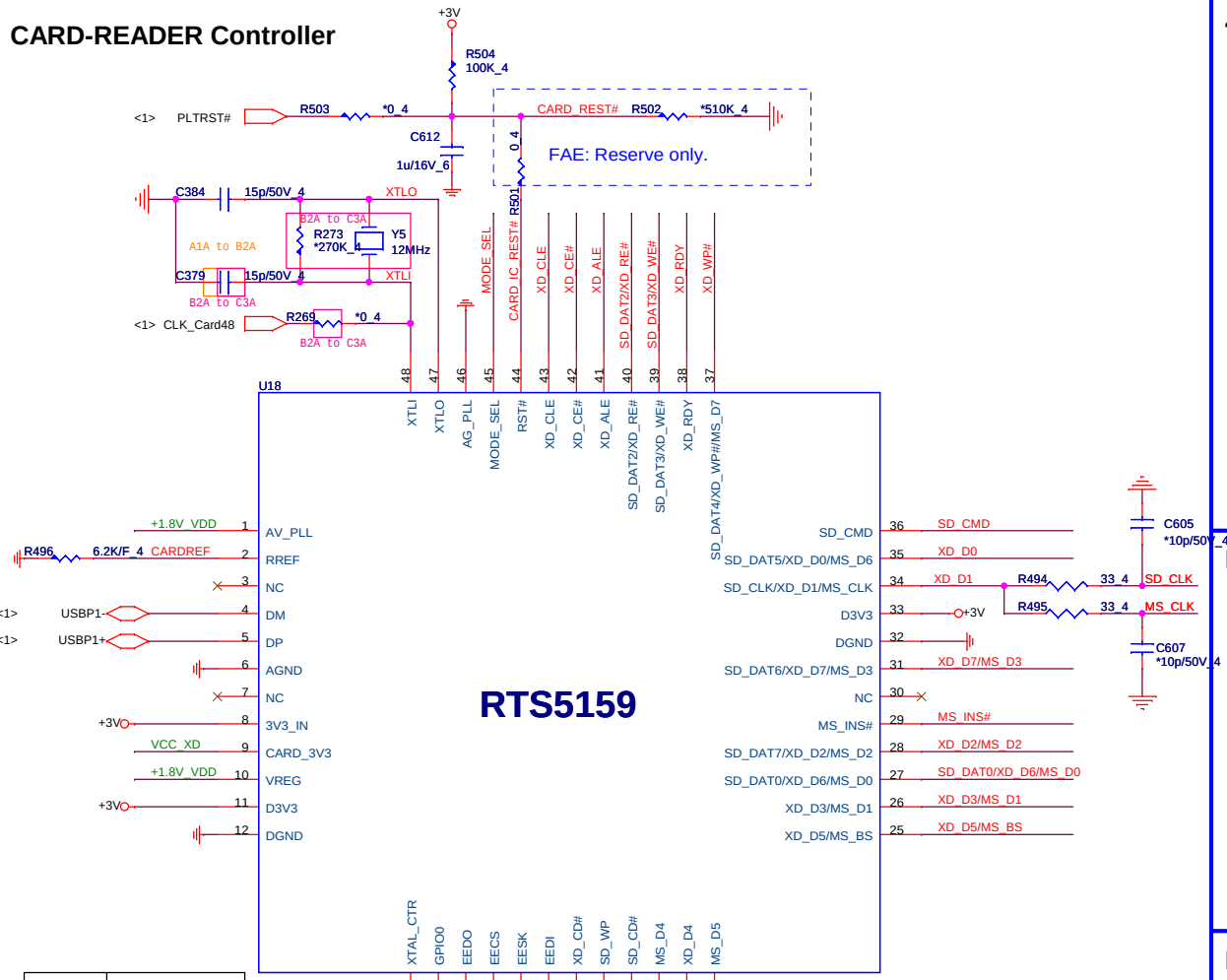

XTAL_CTR	CLK source
Pull-high	48MHz from CLK gen.
Floating	12MHz from Crystal

B2A to C3A

4 IN 1 CARD READER

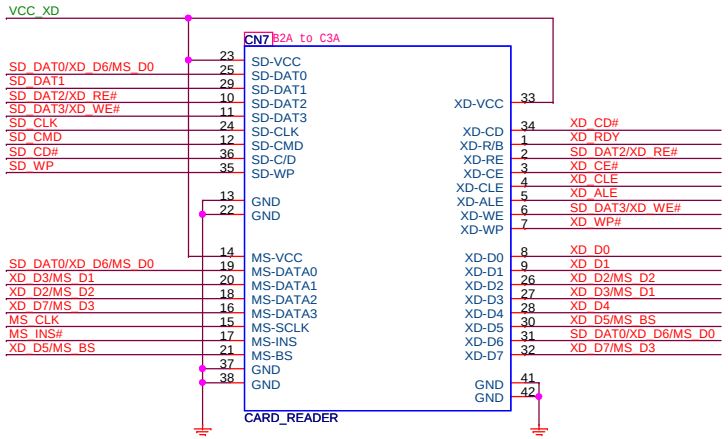

updatefootprint 12/11

Model_Select

RTS5159	R500 =0 ohm
RTS5158E	R500 = NC

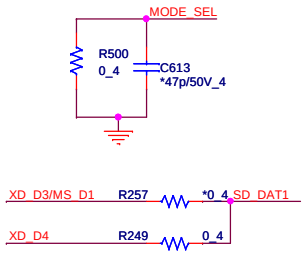

Decoupling CAP

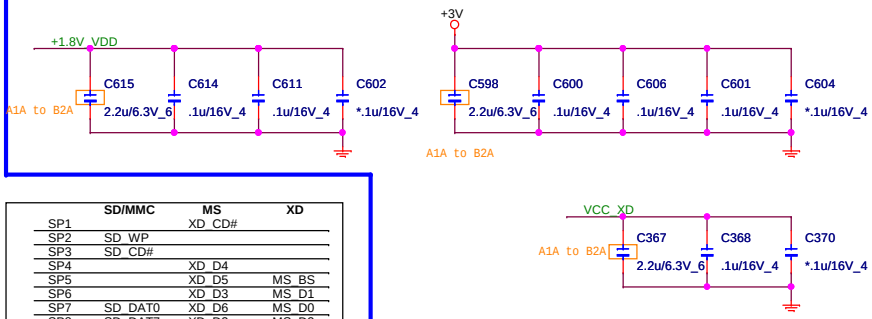

	SD/MMC	MS	XD
SP1		XD_CD#	
SP2	SD_WP		
SP3	SD_CD#		
SP4		XD_D4	
SP5		XD_D5	MS_BS
SP6		XD_D3	MS_D1
SP7	SD_DAT0	XD_D6	MS_D0
SP8	SD_DAT7	XD_D2	MS_D2
SP9			MS_INS#
SP10	SD_DAT6	XD_D7	MS_D3
SP11		XD_D1	
SP12	SD_DAT5	XD_D0	MS_D6
SP13	SD_DAT4	XD_WP#	MS_D7
SP14		XD_RDY	
SP15	SD_DAT3	XD_WE#	
SP16	SD_DAT2	XD_RE#	
SP17		XD_ALE	
SP18		XD_CE#	
SP19		XD_CLE	
			MS_D4
			MS_D5

Quanta Computer Inc.

PROJECT : ZK6

Size	Document Number	Rev
	CARD READER RTS5159	1A

Date: Thursday, March 12, 2009 Sheet 2 of 2

Model	REV	CHANGE LIST	MODEL	ZK6 FROM	ZK6 To

ZK6_USB

FIRST RELEASED: 2009/01/09

A1A to B2A 所有的變更以橘色方框highlight , BOM chane hightlight with red

2009/02/03 item1 page01 CN1 change Part
2009/02/03 item2 page02 add Page02 component
2009/02/05 item3 page01 CN1 update footprint
2009/02/05 item4 page01 CN1 update footprint<88502-1201-12p-l>
2009/02/06 item4 page01 Delete HOLE1,3,4
2009/02/09 item5 page01 HOLE5,HOLE6,HOLE7,HOLE8,HOLE9 connect to GND
2009/02/12 item6 page01 C598,C367,C615 change to CH52201K991

B2A to C3A

2009/03/02 item7 page02 CN7 change footprint from <4IN1-R015-212-LM-42P-H> to <4in1-r015-212-lm-42p-h-nb4>
2009/03/09 item8 page02 Y5,R273更換順序 出來先到晶振才到電阻電容
2009/03/09 item9 page02 R254 & R269 not stuff , C379 & Y5 should stuff
2009/03/11 item10 page01 delete R2,R3
2009/03/12 item11 page02 delete 0 ohm resistor 20 pcs<R250R251R252R253R255R261R262R263R264R265R267R271R272R278R281R282R283R284R285R286>
2009/03/12 item12 page01 C4 change from<CH71001M687>to<CC73301MZ00>

DOC NO.	PROJECT MODEL :	ZK6	APPROVED BY:		DATE:	2009/01/09
	PART NUMBER:		DRAWING BY:		REVISON:	1A

Quanta Computer Inc.
PROJECT : ZK6
Size | Document Number | Change list | Rev 1A
Date: Thursday, March 12, 2009 Sheet 39 of 39