ESD

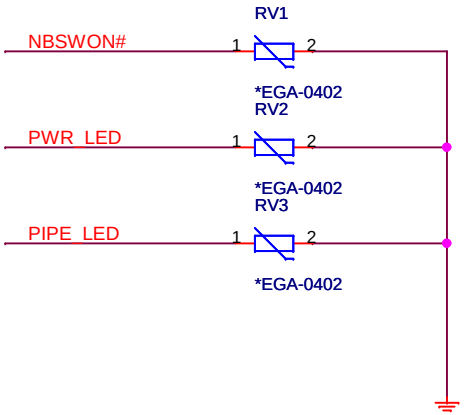

Power button

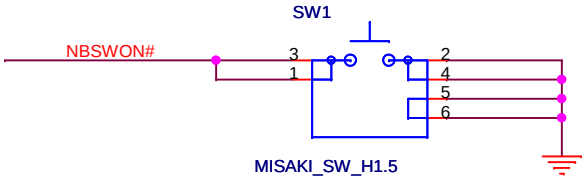

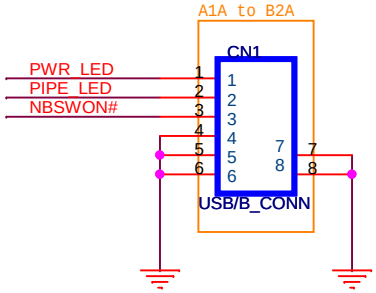

top-emit LED

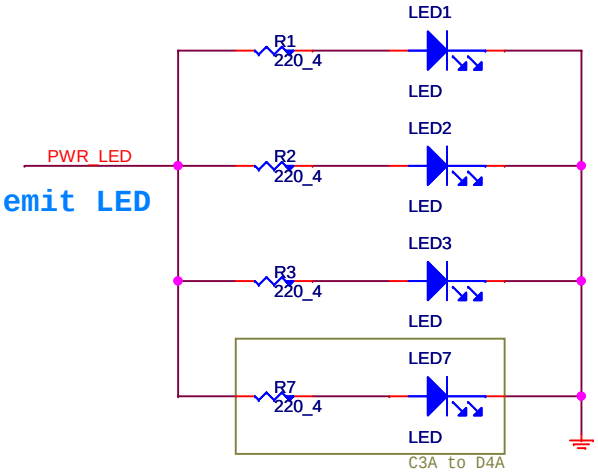

h-c236d106p2 -- 3 pcs

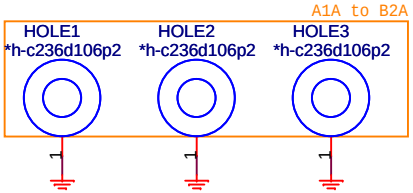

h-c87d87n -- 1 pcs

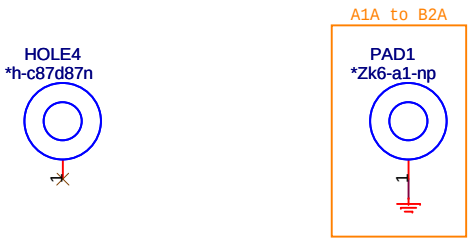

side-emit LED

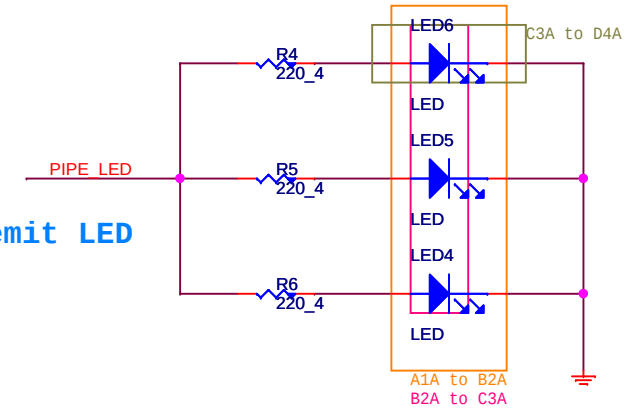

Quanta Computer Inc.		
PROJECT : ZK6		
Size	Document Number	Rev
	Power switch Board	1A
Date: Friday, April 24, 2009	Sheet 1 of 1	

Model	REV	CHANGE LIST	MODEL	ZK6	
				FROM	To

ZK6_Powerswitch board

FIRST RELEASED: 2009/01/09

A1A to B2A 所有的變更以橘色方框highlight , BOM chane hightlight with red

2009/02/05 item1 LED4,5,6 change Footprint , P/N
2009/02/06 item2 HOLE1,2,3 change footprint , h-c236d110p2 change to h-c236d106p2
2009/02/10 item3 add PAD1
2009/02/17 item4 CN1 change from DFFC06FR019 to DFFC06FR280

B2A to C3A

2009/03/11 item5 LED4,5,6 footprint change from<LEDLTST-S326KGJSKT-3P>to<ledltst-s326kgjskt-3p-nb4>

C3A to D3A

2009/04/22 item6 add R7 and LED7

2009/04/22 item7 LED6 change Material and footprint

DOC NO.	PROJECT MODEL :	ZK6	APPROVED BY:		DATE:	2009/01/09
	PART NUMBER:		DRAWING BY:		REVISON:	1A

Quanta Computer Inc.
PROJECT : ZK6
Size | Document Number: Change list | Rev 1A
Date: Friday, April 24, 2009 | Sheet 39 of 39