LINE IN

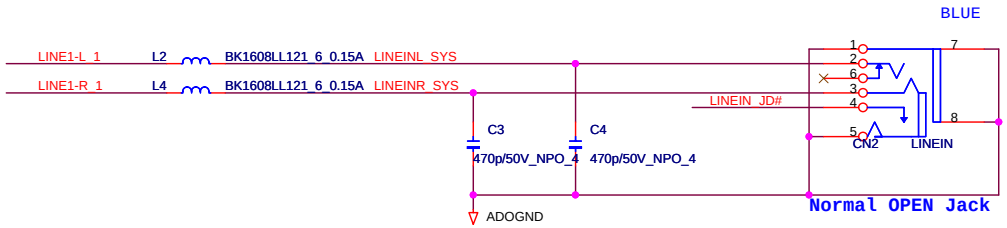

MIC

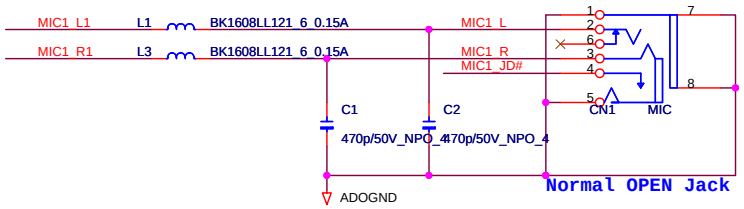

LINE OUT/SPDIF

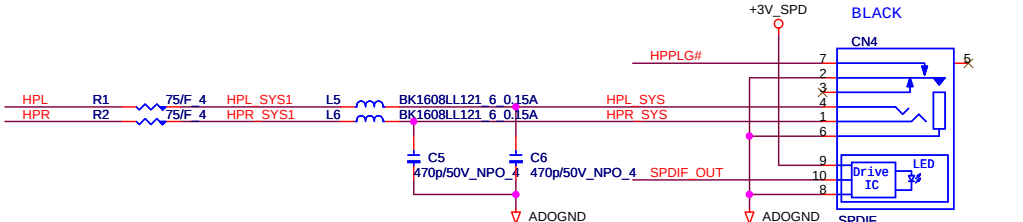

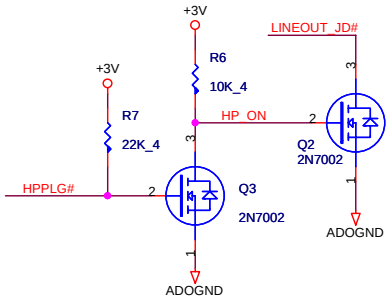

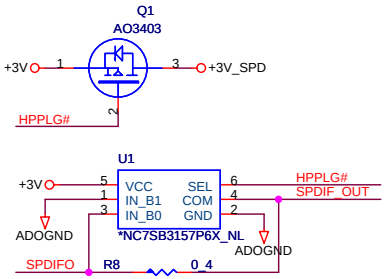

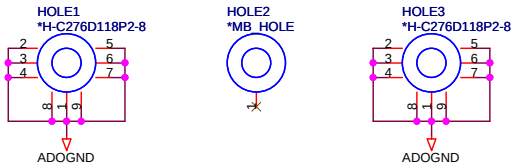

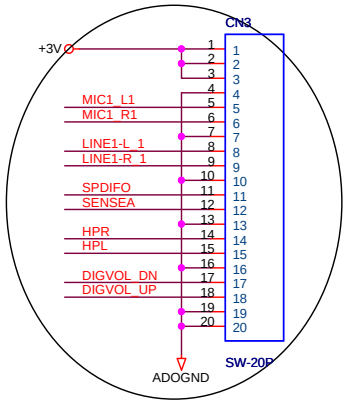

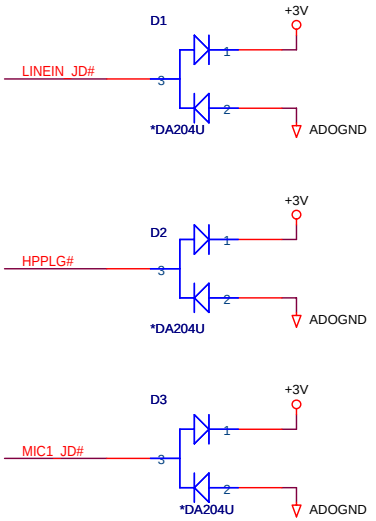

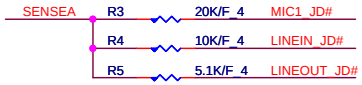

VR

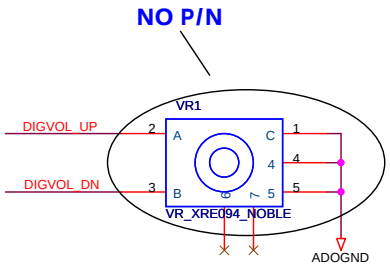

PROJECT : ZO3

Quanta Computer Inc.

Size	Document Number	Rev
	Audio Jack	1A
Date: Friday, March 02, 2007	Sheet 1 of 1	