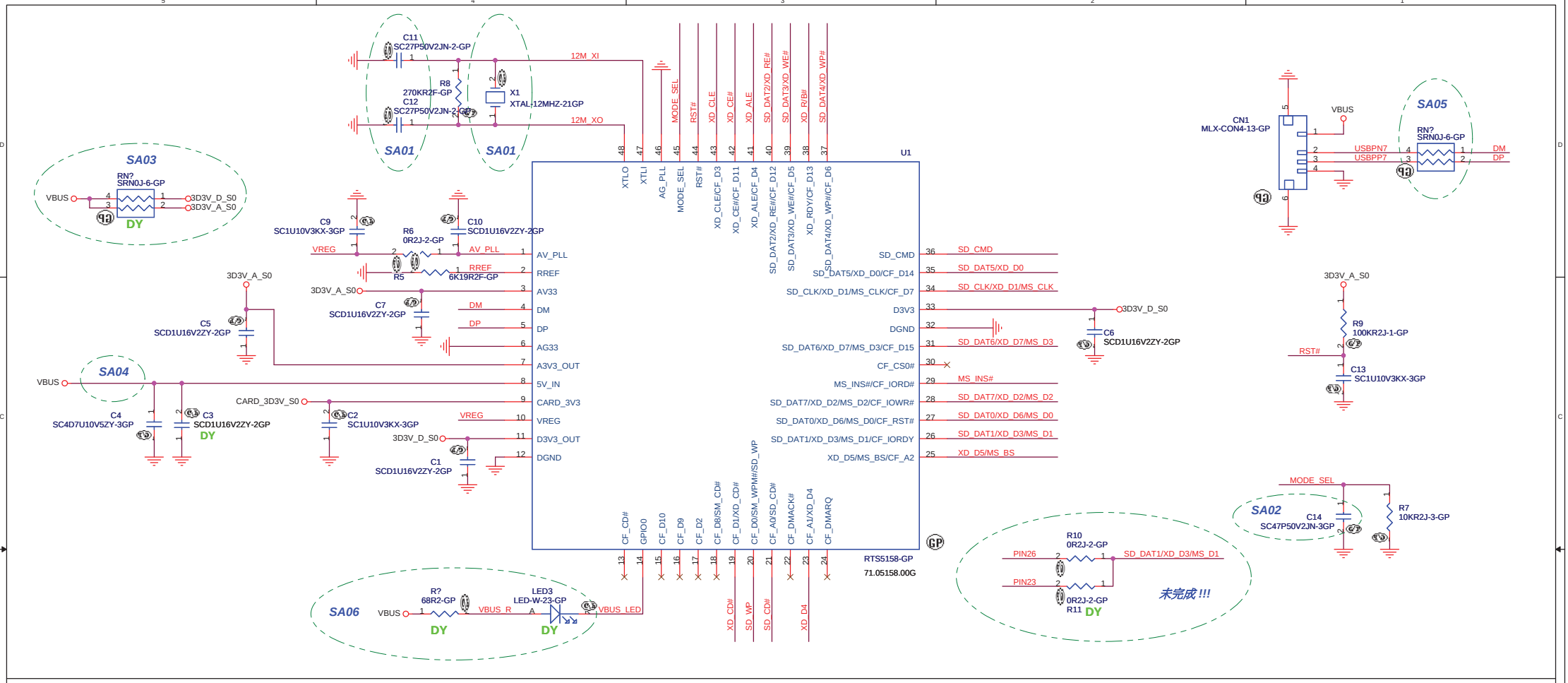

4 IN1 CARD-READER (SD/SD IO/MMC/MMC4.0/MS/MS PRO/XD)

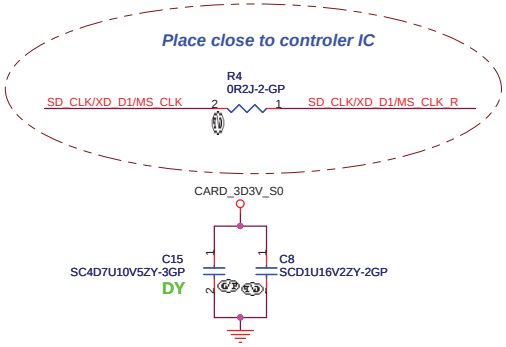

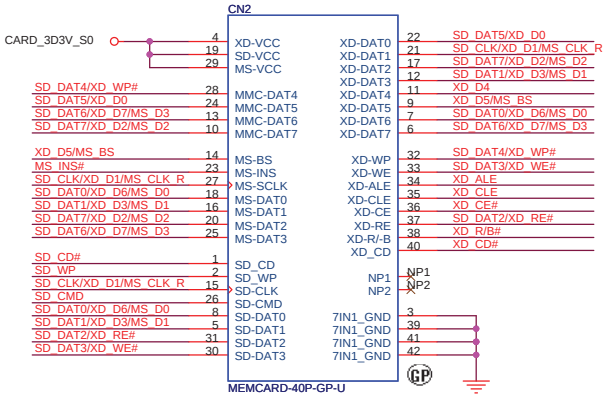

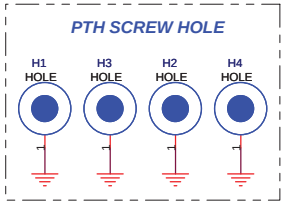

緯創資通	**Wistron Corporation** 21F, 88, Sec.1, Hsin Tai Wu Rd., Hsichih, Taipei Hsien 221, Taiwan, R.O.C.	
Title	*USB Card Reader Controller - RTS5158*	
Size / Document Number	Ferrari 7	Rev SB
Date: Monday, June 25, 2007	Sheet 1 of 1	

Ferrari 7 Cardreader Schematic EC Tracking Record (For SA) Jun.15 , 2007
EC #/ Page / Description / Part Affected

EC SA01/01/ 1. Change X1 P/N from "82.30006.261" to "82.30006.271", the reason is reduce package size.
2. Change C11,C12 from 20pF to 27pF for crystal accuracy.

EC SA02/01/ Change C14 from 0.1uF dummy to 47pF.

EC SA03/01/ Reserve for VBUS=3.3V input.

EC SA04/01/ Delete R3 resistor, the reason is reduce component count.

EC SA05/01/ Delete R1,R2 resistor, the reason is reduce component count.

EC SA06/01/ Reserve for debug use.

EC SA07/01/ 未完成 !!!

緯創資通 Wistron Corporation
21F, 88, Sec.1, Hsin Tai Wu Rd., Hsichih,
Taipei Hsien 221, Taiwan, R.O.C.

Title		
	EC CHANGE LIST	
Size	Document Number	Rev
	Ferrari 7	SB
Date: Monday, June 25, 2007	Sheet 1 of 1	