COMPAL CONFIDENTIAL

MODEL NAME : *DCL56 VGA/B*

COMPAL P/N : *LS-2231*

PCB NO : *DA8CL56L100*

Revision : *2.0*

DATE : *2004/03/02*

History :

```
(1) 12/05 : Modify ATI trapping  value page 03
(2) 12/06 : VRAM Channel A&B swap  page 08 & 09
(3) 12/08 : ADD R82 for SPWG function verify page11
(4) 12/10 : (a) ADD R83 R84  to detect Graphic chip type page 10
            (b) Change JP4 connecter to Match LS-2201 T/P Board page 10
(5) 12/11 : ADD R85 R86 pull down for ATI suggest  page 4,5
(6) 12/12 : ADD power play function page 12
(7) 01/30 : ADD L13 L14 L15 & L5 from 0603 to 0805 page 10
(8) 01/30 : ADD C128  page 11
(9) 03/02 : Change C21,C72,C96 to 100U  page 06,08,09
```

DCL56 Schematics Document

ATI Mobility Radeon M10/M11P Graphics Controller

THIS SHEET OF ENGINEERING DRAWING IS THE PROPRIETARY PROPERTY OF COMPAL ELECTRONICS, INC. AND CONTAINS CONFIDENTIAL AND TRADE SECRET INFORMATION. THIS SHEET MAY NOT BE TRANSFERED FROM THE CUSTODY OF THE COMPETENT DIVISION OF R&D DEPARTMENT EXCEPT AS AUTHORIZED BY COMPAL ELECTRONICS, INC. NEITHER THIS SHEET NOR THE INFORMATION IT CONTAINS

BLOCK DIAGRAM

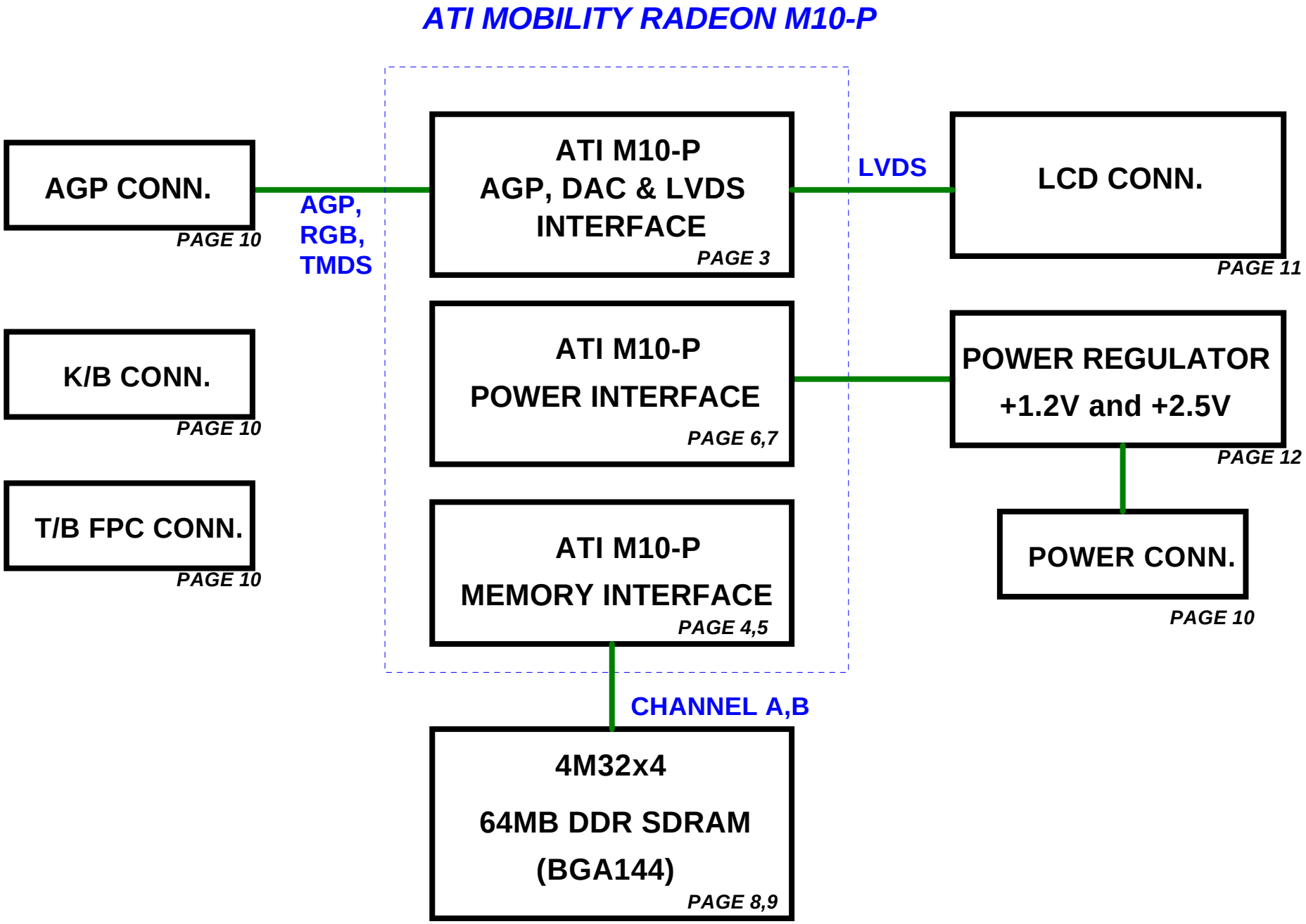

THIS SHEET OF ENGINEERING DRAWING IS THE PROPRIETARY PROPERTY OF COMPAL ELECTRONICS, INC. AND CONTAINS CONFIDENTIAL AND TRADE SECRET INFORMATION. THIS SHEET MAY NOT BE TRANSFERED FROM THE CUSTODY OF THE COMPETENT DIVISION OF R&D DEPARTMENT EXCEPT AS AUTHORIZED BY COMPAL ELECTRONICS, INC. NEITHER THIS SHEET NOR THE INFORMATION IT CONTAINS

Compal Electronics, Inc.		
Title: BLOCK DIAGRAM		
Size: A3	Document Number: DCL56 VGA/B LS-2231	Rev: 2.0
Date: Tuesday, March 02, 2004	Sheet 2 of 12	

AGP, DAC & LVDS INTERFACE

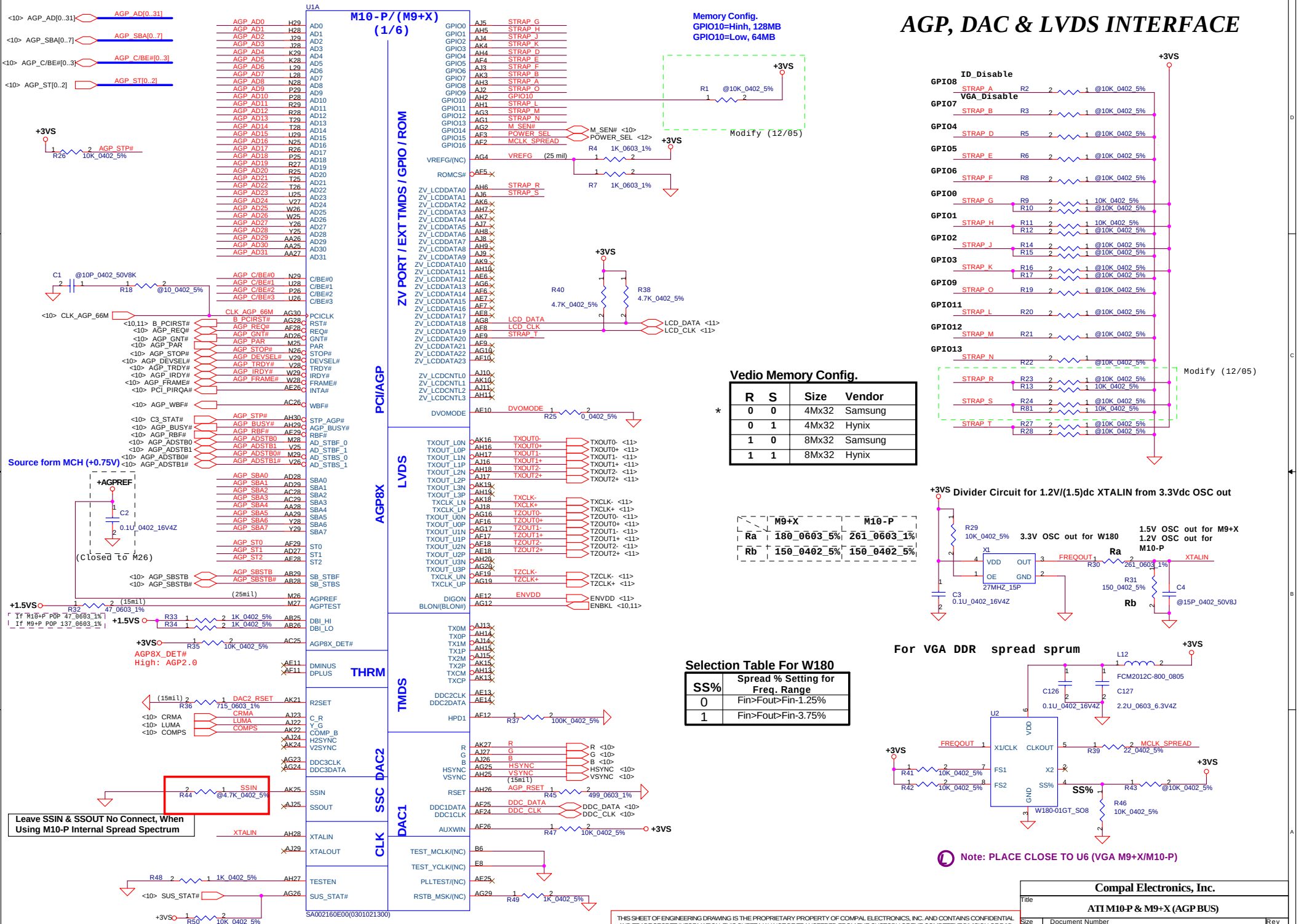

Vedio Memory Config.

	R	S	Size	Vendor
*	0	0	4Mx32	Samsung
	0	1	4Mx32	Hynix
	1	0	8Mx32	Samsung
	1	1	8Mx32	Hynix

	M9+X	M10-P
Ra	180_0603_5%	261_0603_1%
Rb	150_0402_5%	150_0402_5%

Selection Table For W180

SS%	Spread % Setting for Freq. Range
0	Fin>Fout>Fin-1.25%
1	Fin>Fout>Fin-3.75%

THIS SHEET OF ENGINEERING DRAWING IS THE PROPRIETARY PROPERTY OF COMPAL ELECTRONICS, INC. AND CONTAINS CONFIDENTIAL AND TRADE SECRET INFORMATION. THIS SHEET MAY NOT BE TRANSFERED FROM THE CUSTODY OF THE COMPETENT DIVISION OF R&D DEPARTMENT EXCEPT AS AUTHORIZED BY COMPAL ELECTRONICS, INC. NEITHER THIS SHEET NOR THE INFORMATION IT CONTAINS MAY BE USED BY OR DISCLOSED TO ANY THIRD PARTY WITHOUT PRIOR WRITTEN CONSENT OF COMPAL ELECTRONICS, INC.

MEMORY INTERFACE A

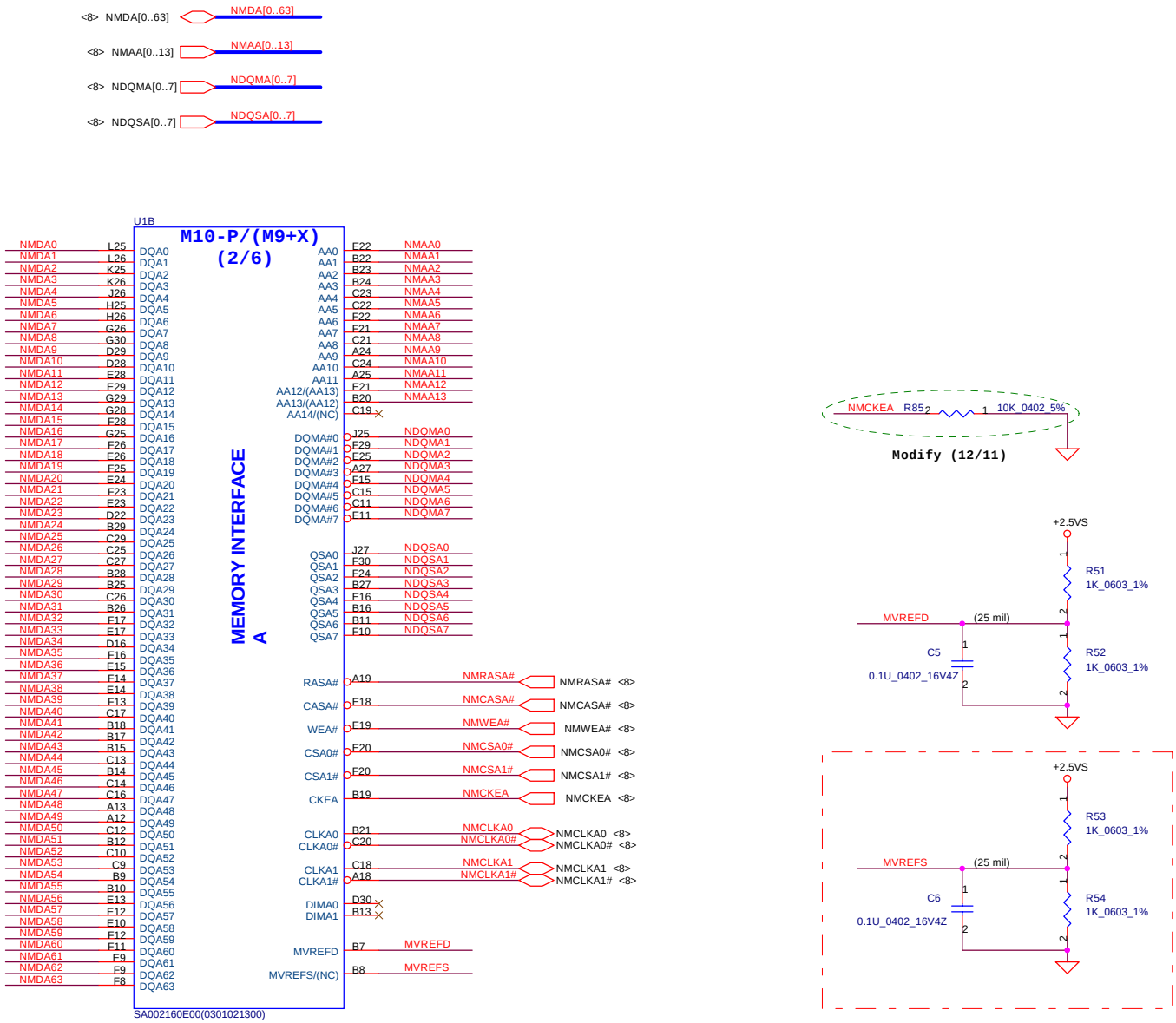

THIS SHEET OF ENGINEERING DRAWING IS THE PROPRIETARY PROPERTY OF COMPAL ELECTRONICS, INC. AND CONTAINS CONFIDENTIAL AND TRADE SECRET INFORMATION. THIS SHEET MAY NOT BE TRANSFERED FROM THE CUSTODY OF THE COMPETENT DIVISION OF R&D DEPARTMENT EXCEPT AS AUTHORIZED BY COMPAL ELECTRONICS, INC. NEITHER THIS SHEET NOR THE INFORMATION IT CONTAINS MAY BE USED BY OR DISCLOSED TO ANY THIRD PARTY WITHOUT PRIOR WRITTEN CONSENT OF COMPAL ELECTRONICS, INC.

Compal Electronics, Inc.	
Title	ATI M10-P/M9+X DDR-A
Size	Document Number: DCL56 VGA/B LS-2231 — Rev 2.0
Date: Tuesday, March 02, 2004	Sheet 4 of 12

MEMORY INTERFACE B

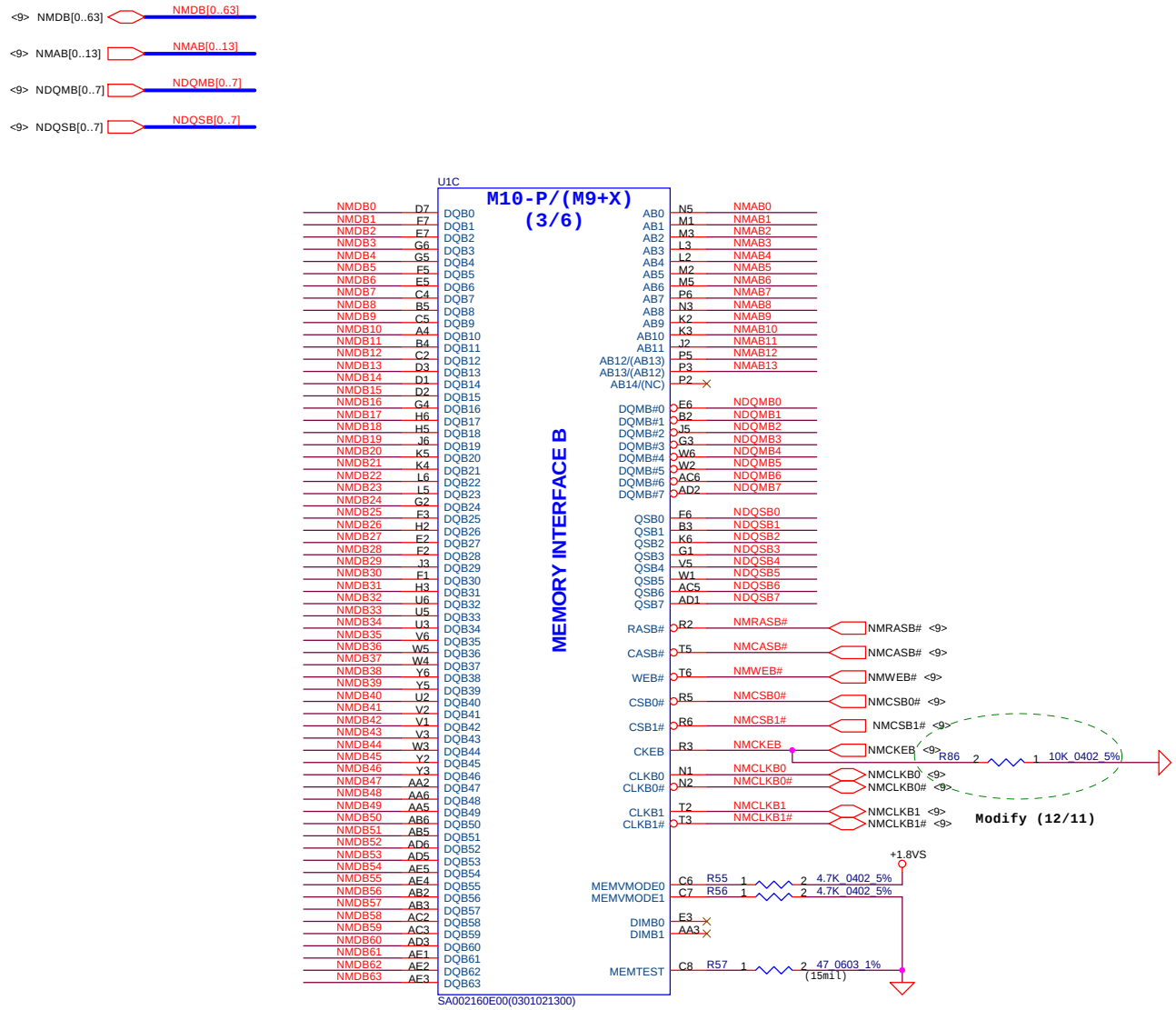

THIS SHEET OF ENGINEERING DRAWING IS THE PROPRIETARY PROPERTY OF COMPAL ELECTRONICS, INC. AND CONTAINS CONFIDENTIAL AND TRADE SECRET INFORMATION. THIS SHEET MAY NOT BE TRANSFERED FROM THE CUSTODY OF THE COMPETENT DIVISION OF R&D DEPARTMENT EXCEPT AS AUTHORIZED BY COMPAL ELECTRONICS, INC. NEITHER THIS SHEET NOR THE INFORMATION IT CONTAINS MAY BE USED BY OR DISCLOSED TO ANY THIRD PARTY WITHOUT PRIOR WRITTEN CONSENT OF COMPAL ELECTRONICS, INC.

Compal Electronics, Inc.	
Title	ATI M10-P/M9+X DDR-B
Size	Document Number: DCL56 VGA/B LS-2231 — Rev 2.0
Date: Tuesday, March 02, 2004	Sheet 5 of 12

POWER INTERFACE

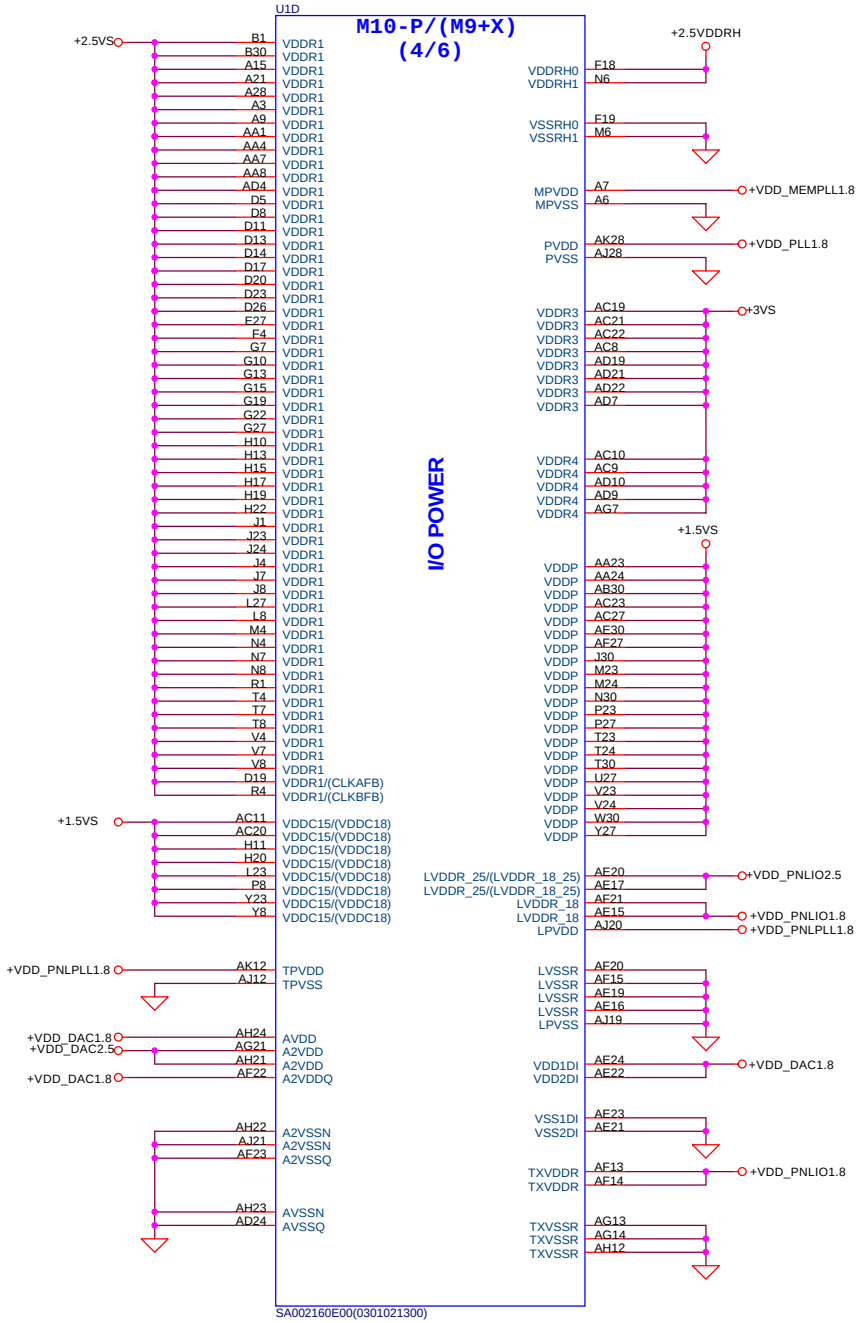

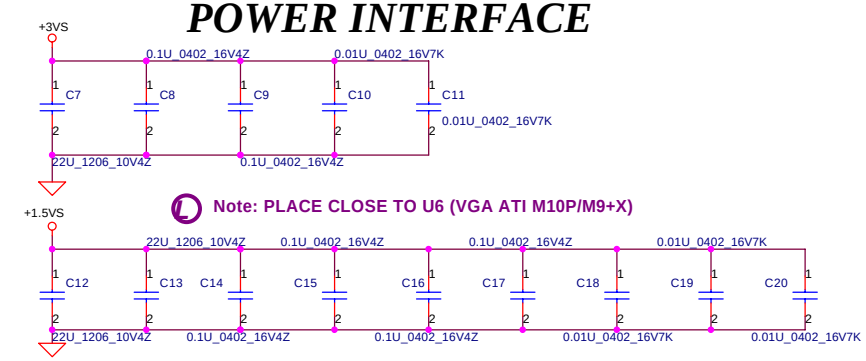

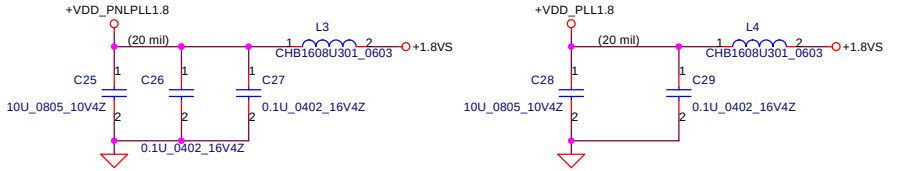

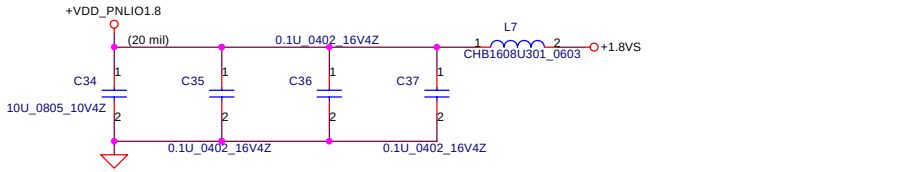

As close as possible to related pin

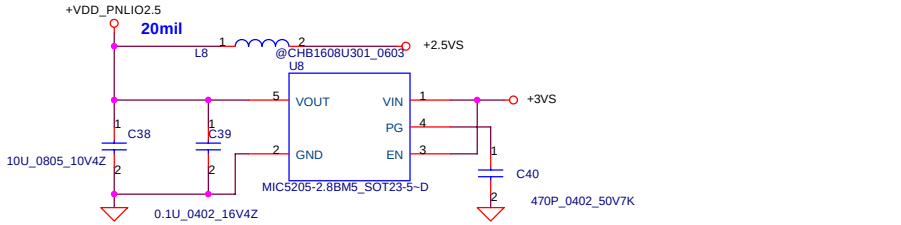

SA052050010(MIC5205-2.8BM5), max:150mA

THIS SHEET OF ENGINEERING DRAWING IS THE PROPRIETARY PROPERTY OF COMPAL ELECTRONICS, INC. AND CONTAINS CONFIDENTIAL AND TRADE SECRET INFORMATION. THIS SHEET MAY NOT BE TRANSFERED FROM THE CUSTODY OF THE COMPETENT DIVISION OF R&D DEPARTMENT EXCEPT AS AUTHORIZED BY COMPAL ELECTRONICS, INC. NEITHER THIS SHEET NOR THE INFORMATION IT CONTAINS MAY BE USED BY OR DISCLOSED TO ANY THIRD PARTY WITHOUT PRIOR WRITTEN CONSENT OF COMPAL ELECTRONICS, INC.

Compal Electronics, Inc.	
Title	ATI M10-P/M9+X POWER-A
Size	Document Number: DCL56 VGA/B LS-2231 — Rev 2.0
Date: Tuesday, March 02, 2004	Sheet 6 of 12

POWER INTERFACE

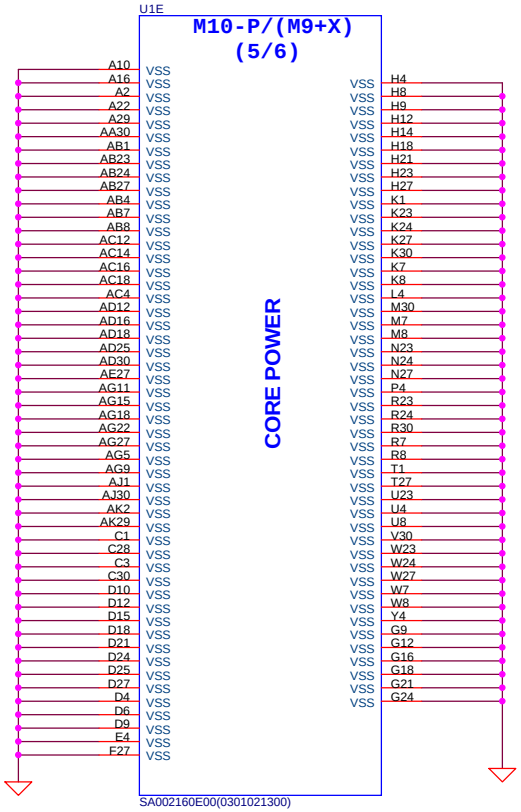

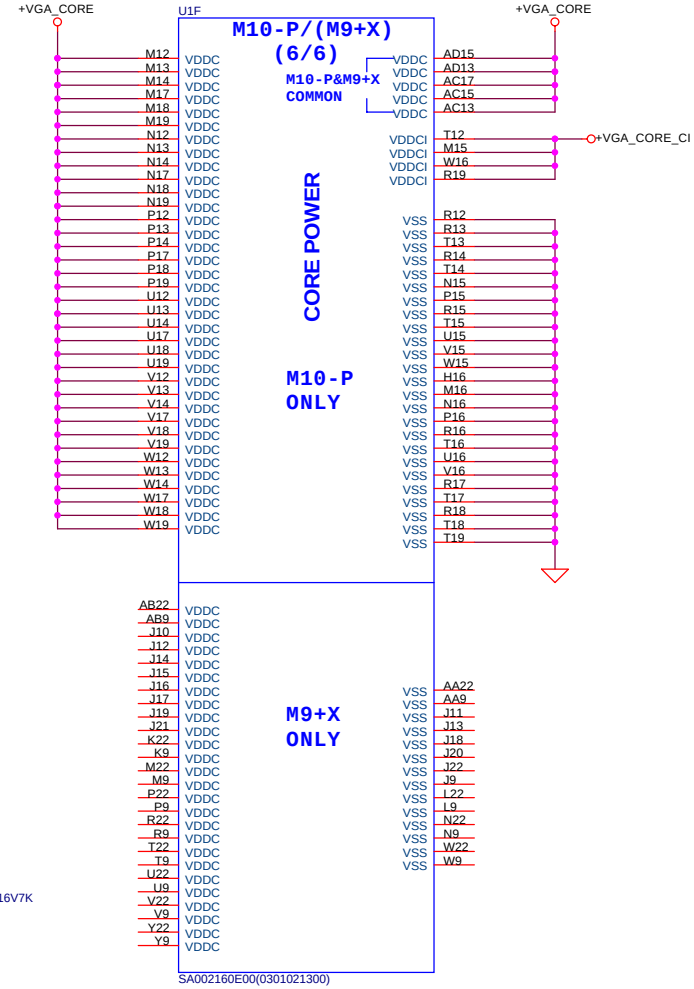

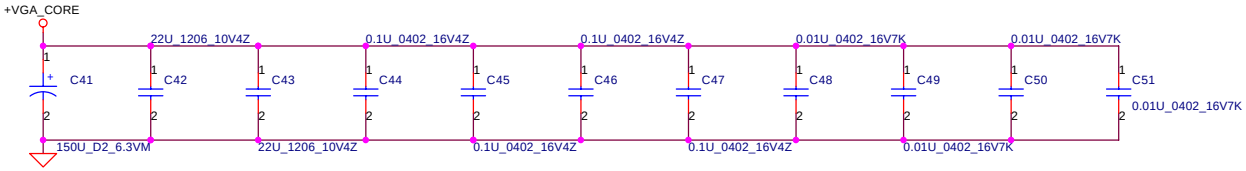

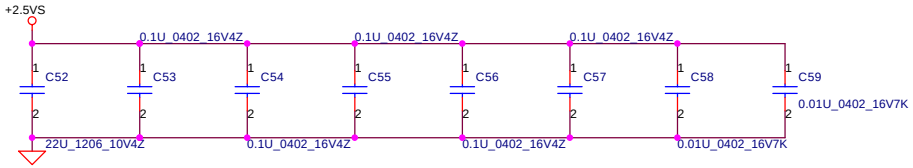

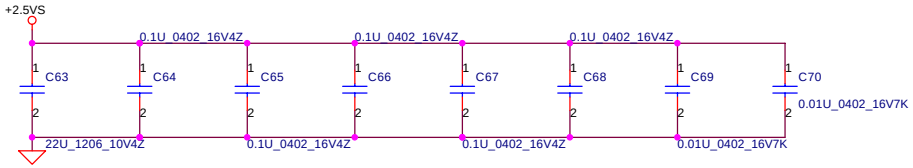

As close as ppossible to related pin

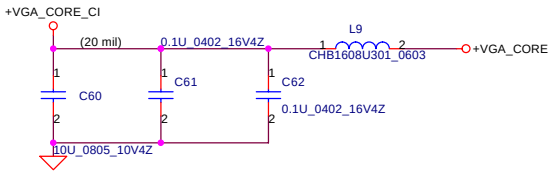

As close as ppossible to related pin

THIS SHEET OF ENGINEERING DRAWING IS THE PROPRIETARY PROPERTY OF COMPAL ELECTRONICS, INC. AND CONTAINS CONFIDENTIAL AND TRADE SECRET INFORMATION. THIS SHEET MAY NOT BE TRANSFERED FROM THE CUSTODY OF THE COMPETENT DIVISION OF R&D DEPARTMENT EXCEPT AS AUTHORIZED BY COMPAL ELECTRONICS, INC. NEITHER THIS SHEET NOR THE INFORMATION IT CONTAINS MAY BE USED BY OR DISCLOSED TO ANY THIRD PARTY WITHOUT PRIOR WRITTEN CONSENT OF COMPAL ELECTRONICS, INC.

Compal Electronics, Inc.	
Title	ATI M10-P/M9+X POWER-B
Size / Document Number	DCL56 VGA/B LS-2231
Rev	2.0
Date: Tuesday, March 02, 2004	Sheet 7 of 12

VGA DDR FOR CHANNEL A

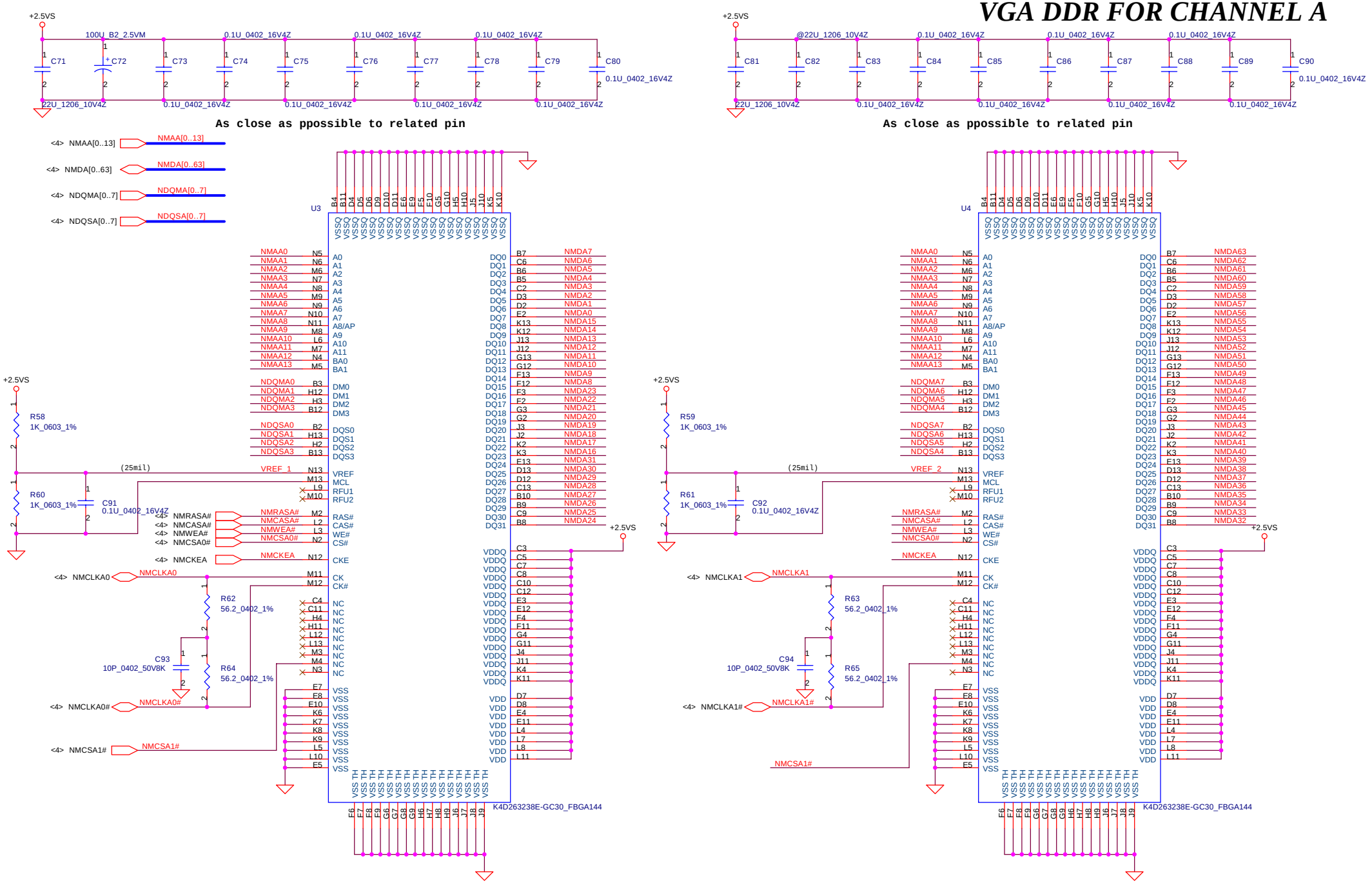

THIS SHEET OF ENGINEERING DRAWING IS THE PROPRIETARY PROPERTY OF COMPAL ELECTRONICS, INC. AND CONTAINS CONFIDENTIAL AND TRADE SECRET INFORMATION. THIS SHEET MAY NOT BE TRANSFERED FROM THE CUSTODY OF THE COMPETENT DIVISION OF R&D DEPARTMENT EXCEPT AS AUTHORIZED BY COMPAL ELECTRONICS, INC. NEITHER THIS SHEET NOR THE INFORMATION IT CONTAINS MAY BE USED BY OR DISCLOSED TO ANY THIRD PARTY WITHOUT PRIOR WRITTEN CONSENT OF COMPAL ELECTRONICS, INC.

Compal Electronics, Inc.	
Title	VGA DDR FOR CHANNEL A
Size	Document Number: DCL56 VGA/B LS-2231 — Rev 2.0
Date: Tuesday, March 02, 2004	Sheet 8 of 12

VGA DDR FOR CHANNEL B

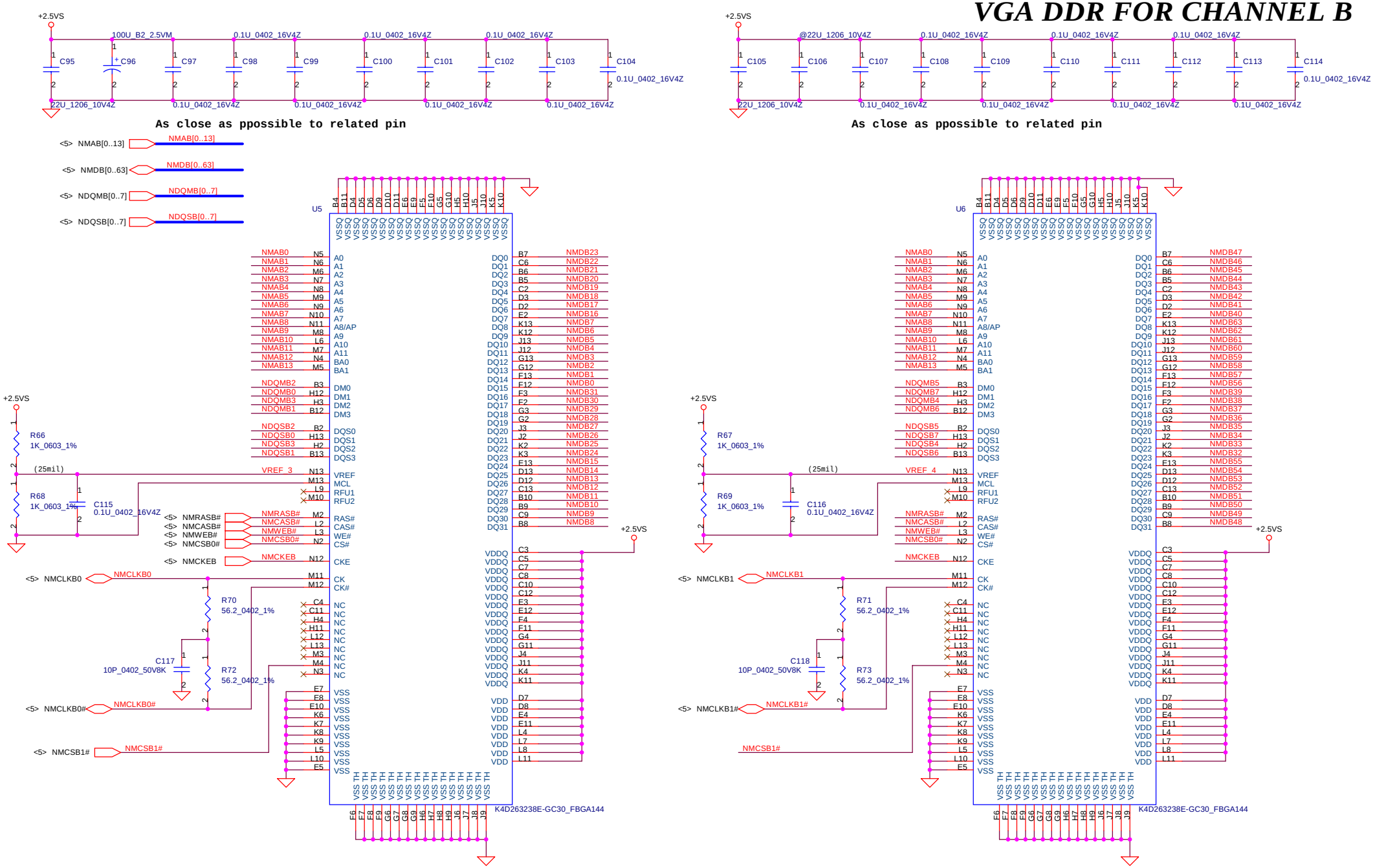

THIS SHEET OF ENGINEERING DRAWING IS THE PROPRIETARY PROPERTY OF COMPAL ELECTRONICS, INC. AND CONTAINS CONFIDENTIAL AND TRADE SECRET INFORMATION. THIS SHEET MAY NOT BE TRANSFERED FROM THE CUSTODY OF THE COMPETENT DIVISION OF R&D DEPARTMENT EXCEPT AS AUTHORIZED BY COMPAL ELECTRONICS, INC. NEITHER THIS SHEET NOR THE INFORMATION IT CONTAINS MAY BE USED BY OR DISCLOSED TO ANY THIRD PARTY WITHOUT PRIOR WRITTEN CONSENT OF COMPAL ELECTRONICS, INC.

Compal Electronics, Inc.	
Title	VGA DDR FOR CHANNEL B
Size	Document Number: DCL56 VGA/B LS-2231 — Rev 2.0
Date: Tuesday, March 02, 2004	Sheet 9 of 12

AGP, POWER & K/B CONNECTOR

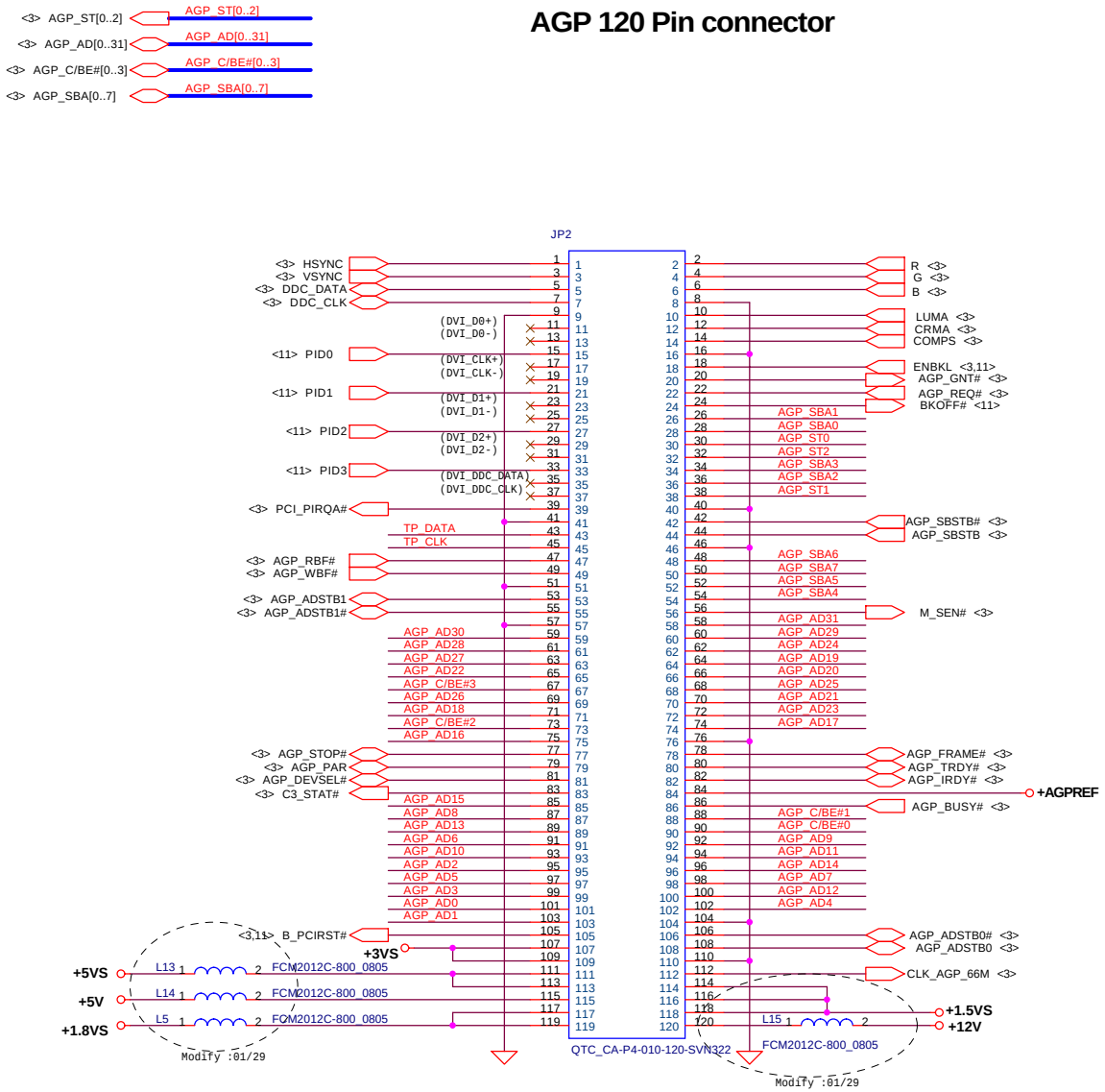

POWER CONN.

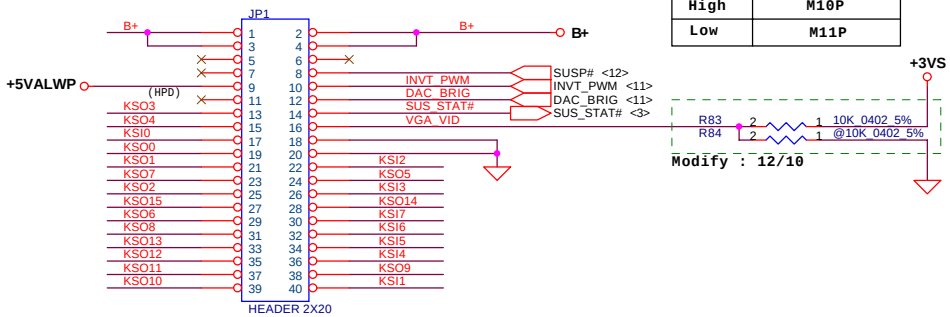

VGA Detect :

VGA_VID	Graphic Chip
High	M10P
Low	M11P

T/P FPC CONN.

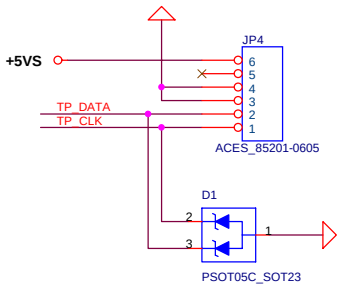

INT_KBD CONN.

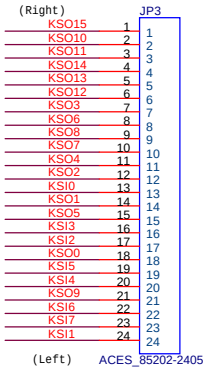

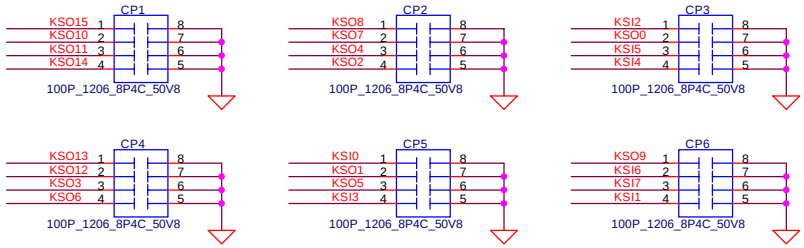

As close as possible to K/B connector

THIS SHEET OF ENGINEERING DRAWING IS THE PROPRIETARY PROPERTY OF COMPAL ELECTRONICS, INC. AND CONTAINS CONFIDENTIAL AND TRADE SECRET INFORMATION. THIS SHEET MAY NOT BE TRANSFERED FROM THE CUSTODY OF THE COMPETENT DIVISION OF R&D DEPARTMENT EXCEPT AS AUTHORIZED BY COMPAL ELECTRONICS, INC. NEITHER THIS SHEET NOR THE INFORMATION IT CONTAINS MAY BE USED BY OR DISCLOSED TO ANY THIRD PARTY WITHOUT PRIOR WRITTEN CONSENT OF COMPAL ELECTRONICS, INC.

Compal Electronics, Inc.		
Title: AGP, POWER, K/B & T/P CONNECTOR		
Size	Document Number: DCL56 VGA/B LS-2231	Rev 2.0
Date: Tuesday, March 02, 2004	Sheet 10 of 12	

LCD CONNECTOR

V:要上零件 , X:不上零件

SKU \ component	R83	R84	R13	R23	R24	R81
M10P+64M(Hyn)	V	X	V	X	V	X
M11P+64M(Sam)	X	V	V	X	X	V
M11P+64M(Hyn)	X	V	V	X	V	X
M11P+128M(Sam)	X	V	X	V	X	V
M11P+128M(Hyn)	X	V	X	V	V	X

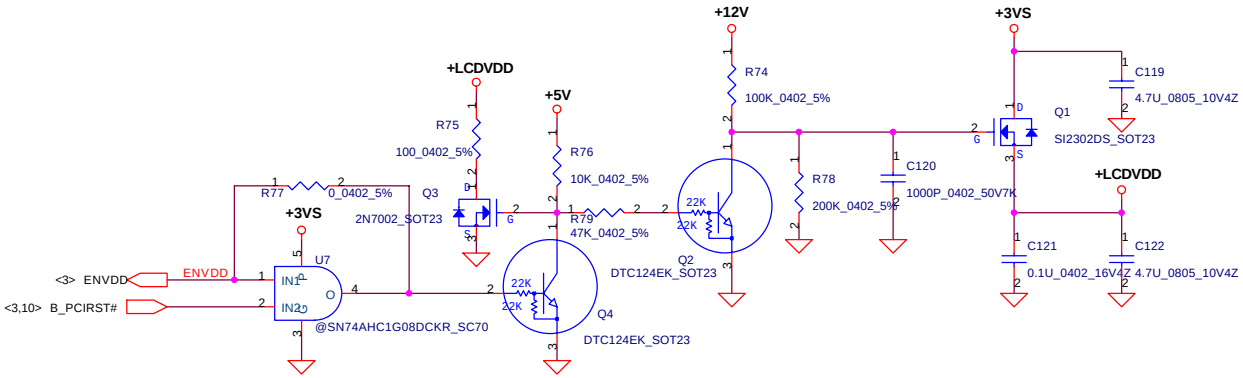

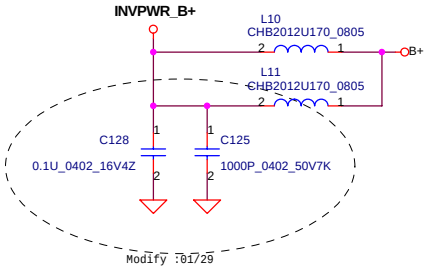

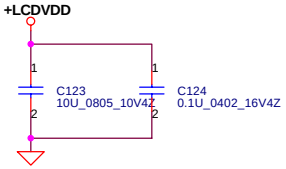

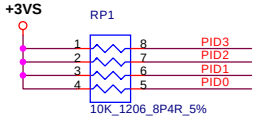

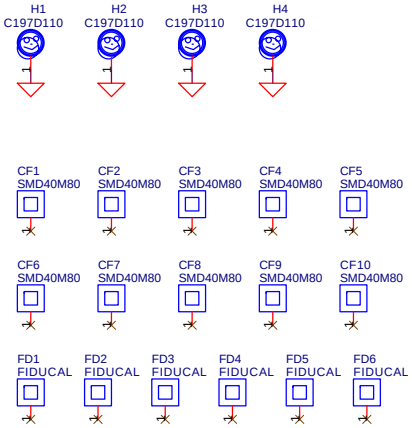

LVDS Connector

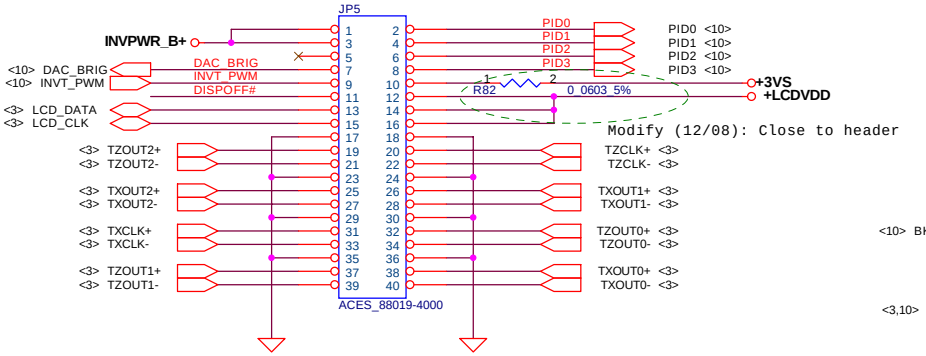

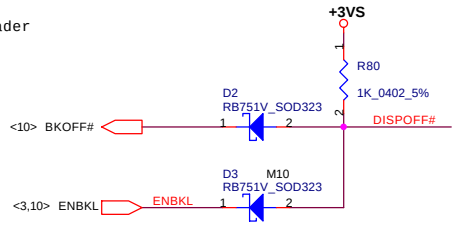

THIS SHEET OF ENGINEERING DRAWING IS THE PROPRIETARY PROPERTY OF COMPAL ELECTRONICS, INC. AND CONTAINS CONFIDENTIAL AND TRADE SECRET INFORMATION. THIS SHEET MAY NOT BE TRANSFERED FROM THE CUSTODY OF THE COMPETENT DIVISION OF R&D DEPARTMENT EXCEPT AS AUTHORIZED BY COMPAL ELECTRONICS, INC. NEITHER THIS SHEET NOR THE INFORMATION IT CONTAINS MAY BE USED BY OR DISCLOSED TO ANY THIRD PARTY WITHOUT PRIOR WRITTEN CONSENT OF COMPAL ELECTRONICS, INC.

Compal Electronics, Ltd.		
Title: LCD CONN. & SPREAD SPECTRUM		
Size	Document Number: DCL56 VGA/B LS-2231	Rev 2.0
Date: Tuesday, March 02, 2004	Sheet 11 of 12	

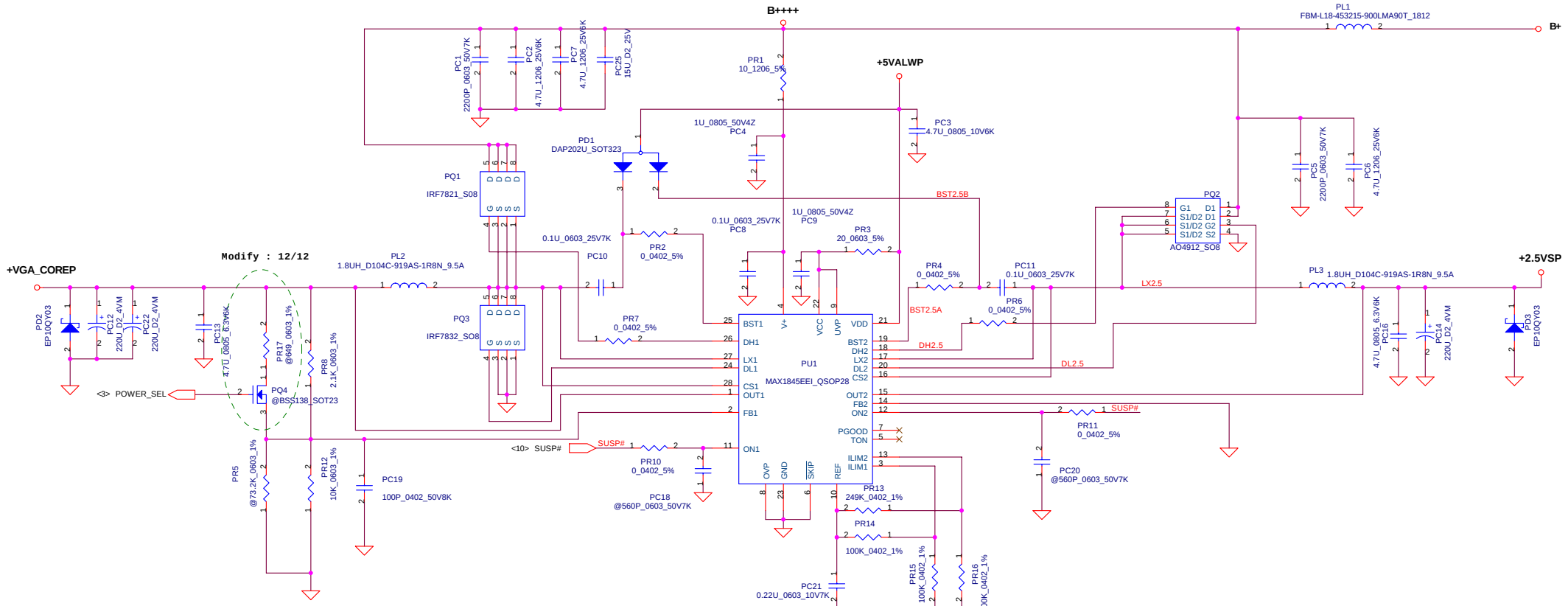

VGA_CORE		
M10	1.2V	PR12=10K;PR5=Delete;POWER_SEL=LOW
M11	1.2V	PR12=10K;PR5=Delete;POWER_SEL=LOW
	1.0V	PR12=10K;PR5=Delete;POWER_SEL=HIGH

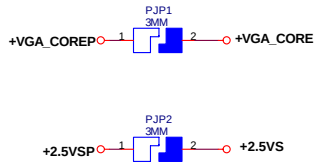

THIS SHEET OF ENGINEERING DRAWING IS THE PROPRIETARY PROPERTY OF COMPAL ELECTRONICS, INC. AND CONTAINS CONFIDENTIAL AND TRADE SECRET INFORMATION. THIS SHEET MAY NOT BE TRANSFERED FROM THE CUSTODY OF THE COMPETENT DIVISION OF R&D DEPARTMENT EXCEPT AS AUTHORIZED BY COMPAL ELECTRONICS, INC. NEITHER THIS SHEET NOR THE INFORMATION IT CONTAINS MAY BE USED BY OR DISCLOSED TO ANY THIRD PARTY WITHOUT PRIOR WRITTEN CONSENT OF COMPAL ELECTRONICS, INC.

Compal Electronics, Inc.

Title: VGA_CORE Power

Size: Custom | Document Number: DCL56 VGA/B LS-2231 | Rev: 2.0

Date: Tuesday, March 02, 2004 | Sheet 12 of 12