ZO3 SYSTEM BLOCK DIAGRAM

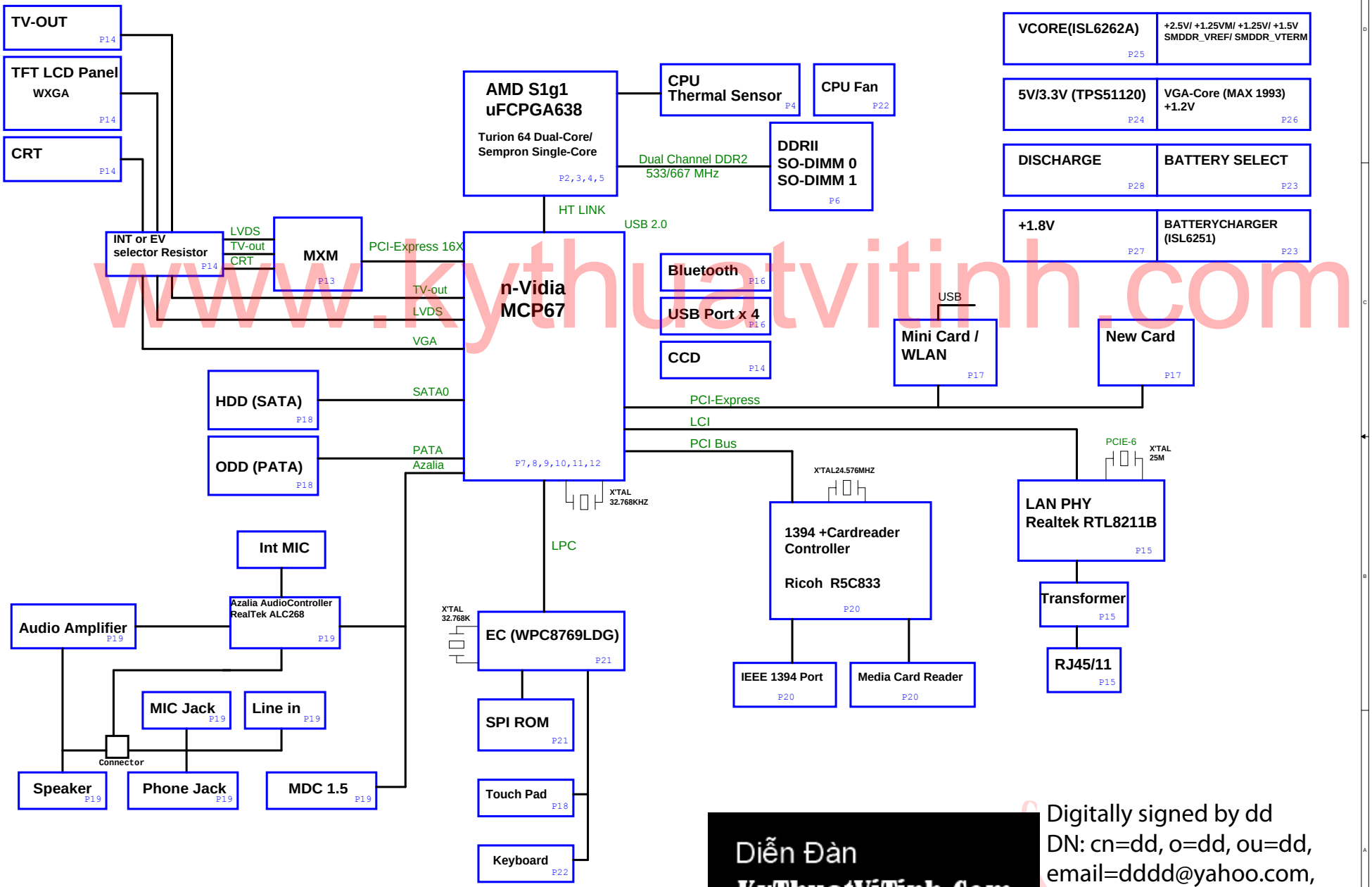

www.kythuatvitinh.com

Diễn Đàn
KyThuatViTinh.Com

Digitally signed by dd
DN: cn=dd, o=dd, ou=dd, email=dddd@yahoo.com, c=US
Date: 2009.11.05 14:03:52 +07'00'

PROJECT : ZO3
Quanta Computer Inc.

Size: A3 | Document Number: Block Diagram | Rev: 1A

Date: Wednesday, April 25, 2007 | Sheet 1 of 30

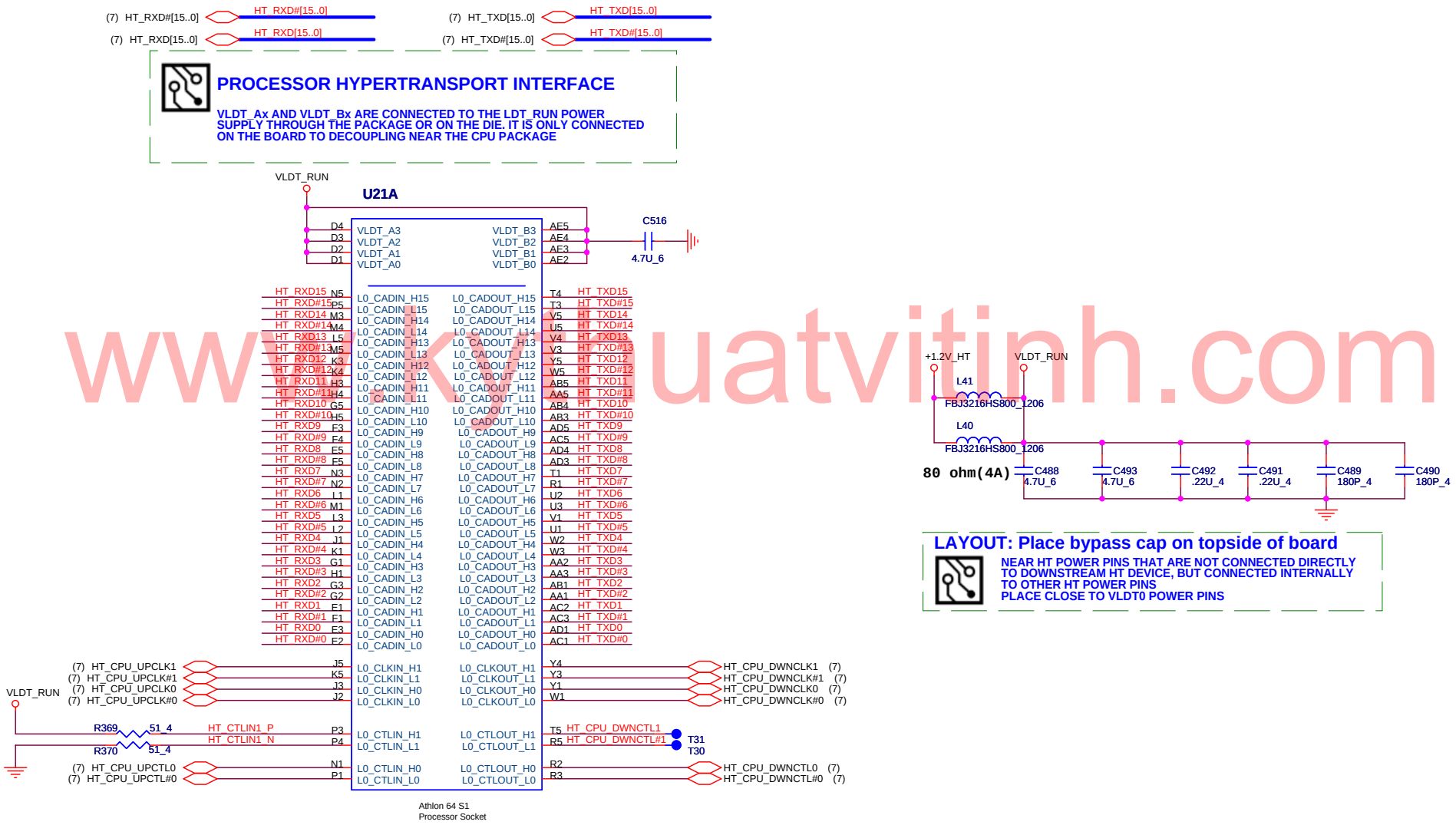

www.Khuatvitinh.com

PROJECT : ZO3
Quanta Computer Inc.

Size	Document Number	Rev
	ATHLON64 HT I/F	1A

Date: Wednesday, April 25, 2007 Sheet 2 of 30

Processor DDR2 Memory Interface

VDD_VTT_SUS_CPU IS CONNECTED TO THE VDD_VTT_SUS POWER SUPPLY THROUGH THE PACKAGE OR ON THE DIE. IT IS ONLY CONNECTED ON THE BOARD TO DECOUPLING NEAR THE CPU PACKAGE

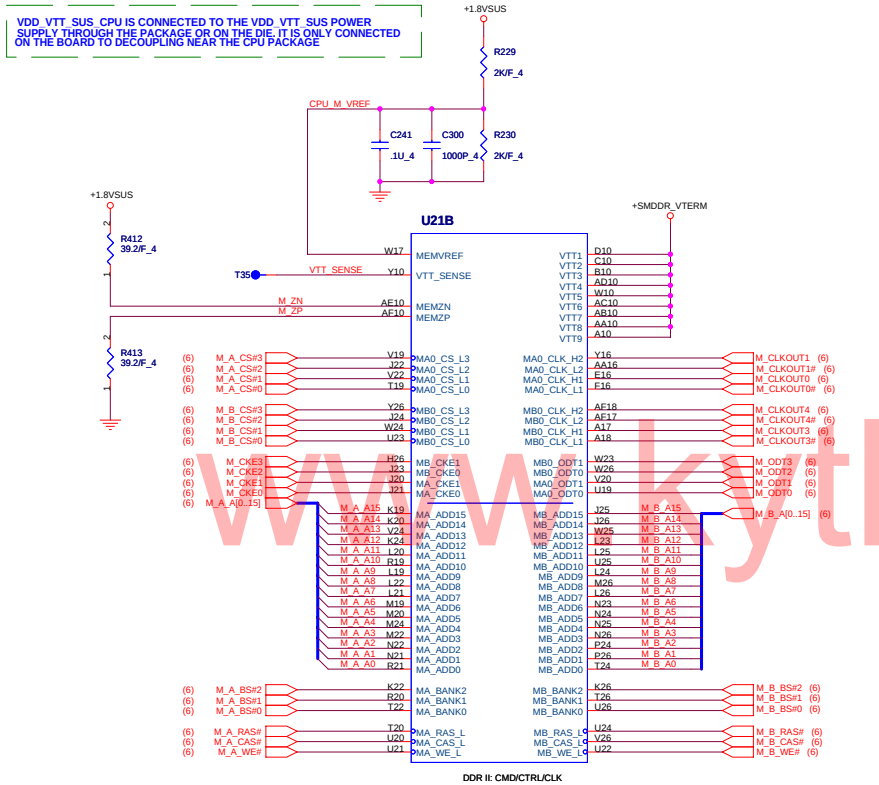

Near CPU L<1200mil

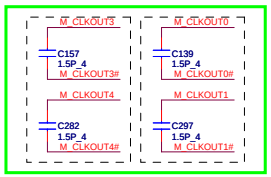

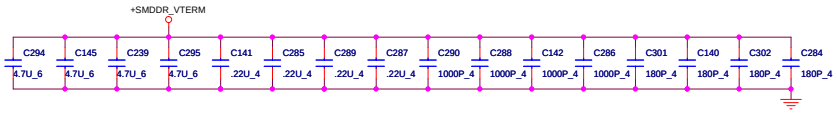

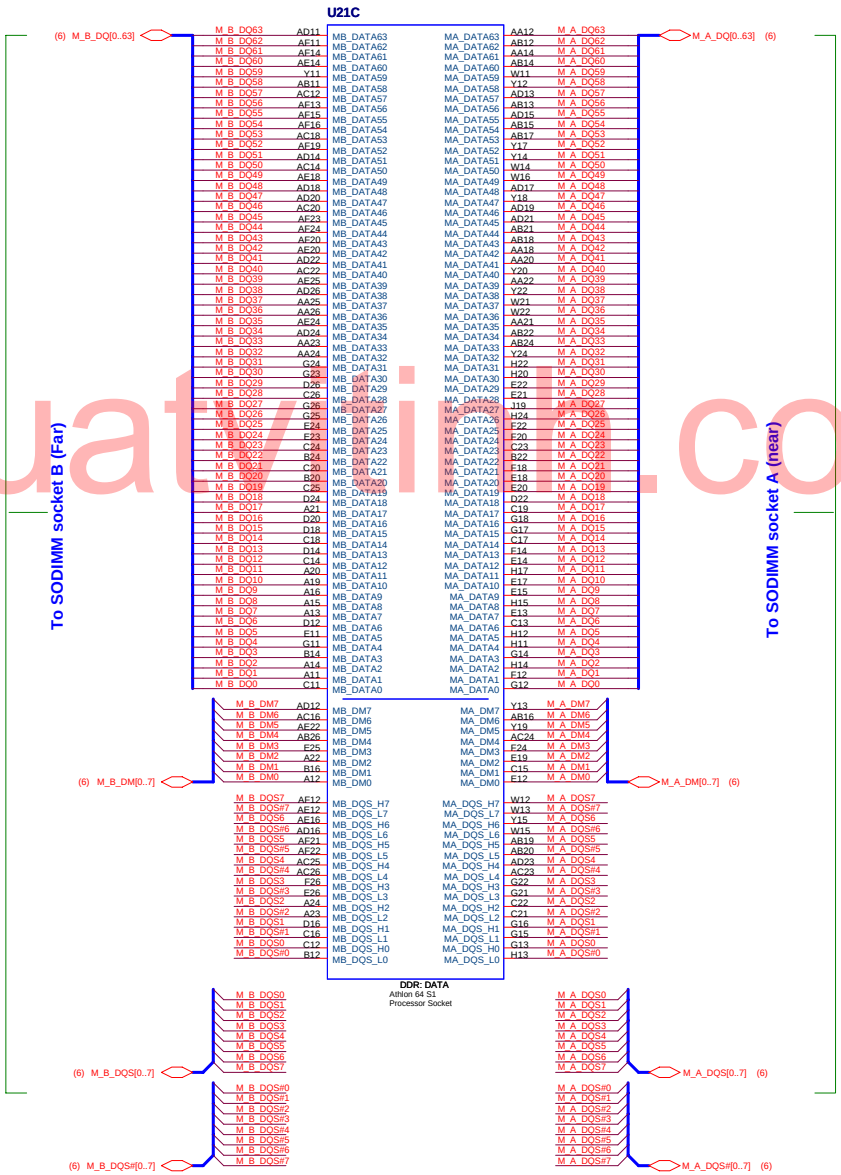

www.kythuatvi.com

PROJECT : ZO3
Quanta Computer Inc.

Size	Document Number	Rev
	ATHLON64 DDRII MEMORY I/F	1A

Date: Wednesday, April 25, 2007 Sheet 3 of 30

ATHLON Control and Debug

LAYOUT: ROUTE VDDA TRACE APPROX. 50 mils WIDE (USE 2x25 mil TRACES TO EXIT BALL FIELD) AND 500 mils LONG.

CPU_VDDA_RUN

CPU_VDDA_RUN — L16 BLM18PG330SN1D_6 — +2.5V
C137 4.7U_6 — C192 .22U_4 — C128 3300P_4 — C130 100U-6.3V_3528

If AMD SI is not used, the SID pin can be left unconnected and SIC should have a 300-Ω (±5%) pulldown to VSS.

+1.8VSUS — R406 *300_4 — CPU_SID_R
R404 *300_4
R403 300_4 — CPU_SIC_R

U21D

VDDA2 — CPU_VDDA_RUN
VDDA1
RESET_L — CPU_HT_RESET#
PWROK — CPU_ALL_PWROK
LDTSTOP_L — CPU_LDTSTOP#
SIC — CPU_SIC_R
SID — CPU_SID_R
HT_REF1 — CPU_HTREF1
HT_REF0 — CPU_HTREF0
VDD_FB_H — (25) COREFB+V
VDD_FB_L — (25) COREFB-
VDDIO_FB_H — CPU_VDDIO_SUS_FB_H
VDDIO_FB_L — CPU_VDDIO_SUS_FB_L
CLKIN_H — CPU_CLKIN_SC_P
CLKIN_L — CPU_CLKIN_SC_N
DBRDY — CPU_DBRDY
TMS — CPU_TMS
TCK — CPU_TCK
TRST_L — CPU_TRST#
TDI — CPU_TDI
TEST25_H — CPU_TEST25_H_BYPASSCLK_H
TEST25_L — CPU_TEST25_L_BYPASSCLK_L
TEST19 — CPU_TEST19_PLLTEST0
TEST18 — CPU_TEST18_PLLTEST1
TEST17 — CPU_TEST17_BP3
TEST16 — CPU_TEST16_BP2
TEST15 — CPU_TEST15_BP1
TEST14 — CPU_TEST14_EP0
TEST12 — CPU_TEST12_SCANSHIFTENB
TEST7 — CPU_TEST5_THERMDC
TEST4 — CPU_TEST4_THERMDA
THERMTRIP_L — H_THERMTRIP#
PROCHOT_L — H_PROCHOT#
VID5 — H_VID5 (25)
VID4 — H_VID4 (25)
VID3 — H_VID3 (25)
VID2 — H_VID2 (25)
VID1 — H_VID1 (25)
VID0 — H_VID0 (25)
CPU_PRESENT_L — CPU_PRESENT#
PSI_L — PSI#
DBREQ_L — CPU_DBREQ#
TDO — CPU_TDO
TEST29_H — CPU_TEST29_H_FBCLKOUT_P
TEST29_L — CPU_TEST29_L_FBCLKOUT_N
TEST24 — CPU_TEST24_SCANCLK1
TEST23 — CPU_TEST23_TSTUPD
TEST22 — CPU_TEST22_SCANSHIFTEN
TEST21 — CPU_TEST21_SCANEN
TEST20 — CPU_TEST20_SCANCLK2
TEST27 — CPU_TEST27_SINGLECHAIN
TEST26 — CPU_TEST26_BURNIN#
RSVD0 RSVD1 RSVD2 RSVD3 RSVD4 RSVD5 RSVD6 RSVD7 RSVD8 RSVD9 RSVD10 RSVD11 RSVD12 RSVD13 RSVD14 RSVD15 RSVD16 RSVD17 RSVD18 RSVD19 RSVD20
MISC

AMD NPT S1 SOCKET
Processor Socket

+1.8VSUS — R142 300_4

VLDT_RUN — R226 44.2/F_4 — R225 44.2/F_4

PSI_L is a Power Status Indicator signal. This signal is asserted when the processor is in a low powerstate. PSI_L should be connected to the power supply controller, if the controller supports "skipmode, or diode emulation mode". PSI_L is asserted by the processor during the C3 and S1 states.

TEST29_H and TEST29_H differential pair should have an 80-differential trace routed to a termination resistor. These traces should be shorter than 1.5 inches. 6/4/06

R158 80.6/F_4

(7) CPU_CLK — C143 3900P_4 — R159 169/F_6 — (7) CPU_CLK# — C154 3900P_4

+3V — +1.8VSUS — R402 *4.7K/F_4 — C513 *1U_4 — (7) HTCPU_PWRGD — U22 *NC7SZ08P5X_NL — CPU_ALL_PWROK — R400 0_4

+1.8VSUS — C510 *1U_4 — (7) HTCPU_STOP# — U24 *NC7SZ08P5X_NL — CPU_LDTSTOP# — R223 0_4

+1.8VSUS — C512 *1U_4 — (7) HTCPU_RST# — (11,13,21) PWROK_EC — R401 *0_4 — U23 *NC7SZ08P5X_NL — CPU_HT_RESET# — R220 0_4

+1.8V — +3V — R357 10K_4 — R349 1K/F_4 — PSI# — Q29 MMBT3904 — PWR_PSI# (25)

+1.8VSUS — R410 220_4 — R411 220_4 — R413 220_4 — R408 220_4 — R147 220_4

HDT CONNECTOR

CN6 *ASP-68200-07-25P-L9V — HDTGND

CPU_DBREQ#	T6	GND1	GND2
CPU_DBRDY	T29	RSVD1	GND4
CPU_TCK	T36	RSVD0	GND6
CPU_TMS	T33	DBREQ_L	GND8
CPU_TDI	T39	DBRDY	GND10
CPU_TRST#	T37	TCK	GND12
CPU_TDO	T38	TMS	GND14
		TDI	GND16
		TRST_L	GND18
		TDO	GND20
		VCC_PROC_IO_21	GND22
		VCC_PROC_IO_23	RESET_L
		KEY	GND26

+1.8VSUS — R339 10K_4 — +3V — R341 1K/F_4 — H_HTCPU_RST# — T5 — HTCPU_RST# — Q27 MMBT3904

+1.8VSUS — R240 *330_4 — Q15 *MMBT3904 — (7) MCP67_THERMIP# — +1.8V — R425 330_4 — R243 *4.7K_4 — PWROK_EC — R242 *4.7K_4 — Q16 MMBT3904 — +1.8VSUS — 300_4 — R233 — H_THERMTRIP# — THERM_SYS_PWR (24)

+1.8V — R236 330_4 — +1.8VSUS — R231 300_4 — Q14 MMBT3904 — R232 *0_4 — EC_PROCHOT# (21) — H_PROCHOT# — MCP67_PROCHOT# (7)

CPU_TEST27_SINGLECHAIN	R409	*300_4
CPU_TEST26_BURNIN#	R407	300_4
CPU_PRESENT#	R234	1K/F_4
CPU_TEST25_H_BYPASSCLK_H	R148	510/F_4

CPU_TEST21_SCANEN	R405	300_4
CPU_TEST25_L_BYPASSCLK_L	R157	510/F_4
CPU_PRESENT#	R185	300_4
CPU_TEST18_PLLTEST1	R187	300_4

CPU H/W MONITOR

+3V — R235 47/F_6 — 3V_THM — C321 1U_4 — 15 MIL

Address 98H

U9 G781: VCC, DXN, DXP, OVT, ALT, SMDATA, SMCLK, GND — KBSMDAT, KBSMCLK

CPU_TEST5_THERMDC — C323 2200P_4 — CPU_TEST4_THERMDA
10 mil trace / 10 mil space

+3V — R244 10K_4 — Q30 2N7002E — THERM_ALERT# (11) — To SB GPIO

+3V — R239 4.7K_4 — Q32 2N7002E — MBDATA_CPU (21)

+3V — R238 4.7K_4 — Q31 2N7002E — MBCLK_CPU (21)

+3V — R245 10K_4 — To FAN — CPUFAN#_ON (22)

PROJECT : ZO3
Quanta Computer Inc.

Size	Document Number	Rev
	ATHLON64 CTRL & DEBUG	2A

Date: Wednesday, April 25, 2007 Sheet 4 of 30

www.kythuatvitri.com

PROCESSOR POWER AND GROUND

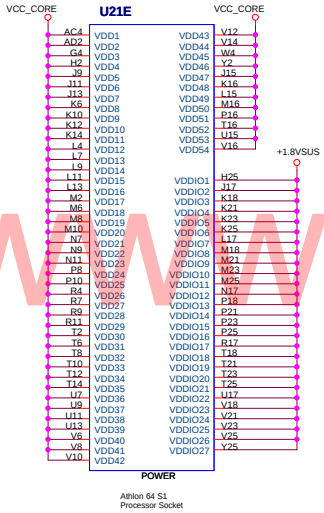

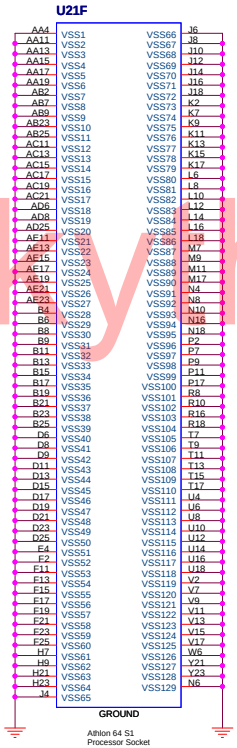

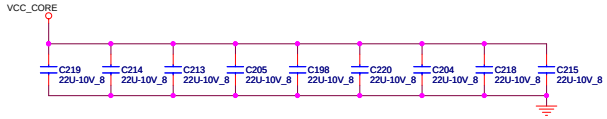

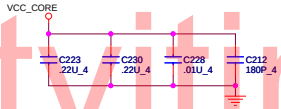

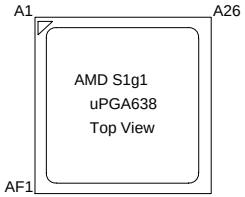

DECOUPLING BETWEEN PROCESSOR AND DIMMs
PLACE CLOSE TO PROCESSOR AS POSSIBLE

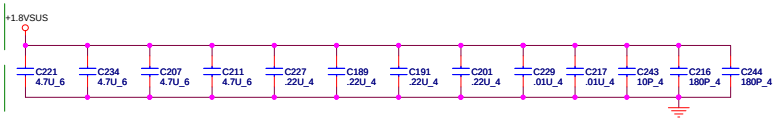

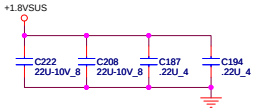

www.hyhuatvitinh.com

PROJECT : ZO3 Quanta Computer Inc.		
Size	Document Number ATHLON64 PWR & GND	Rev 1A
Date: Wednesday, April 25, 2007	Sheet 5 of 30	

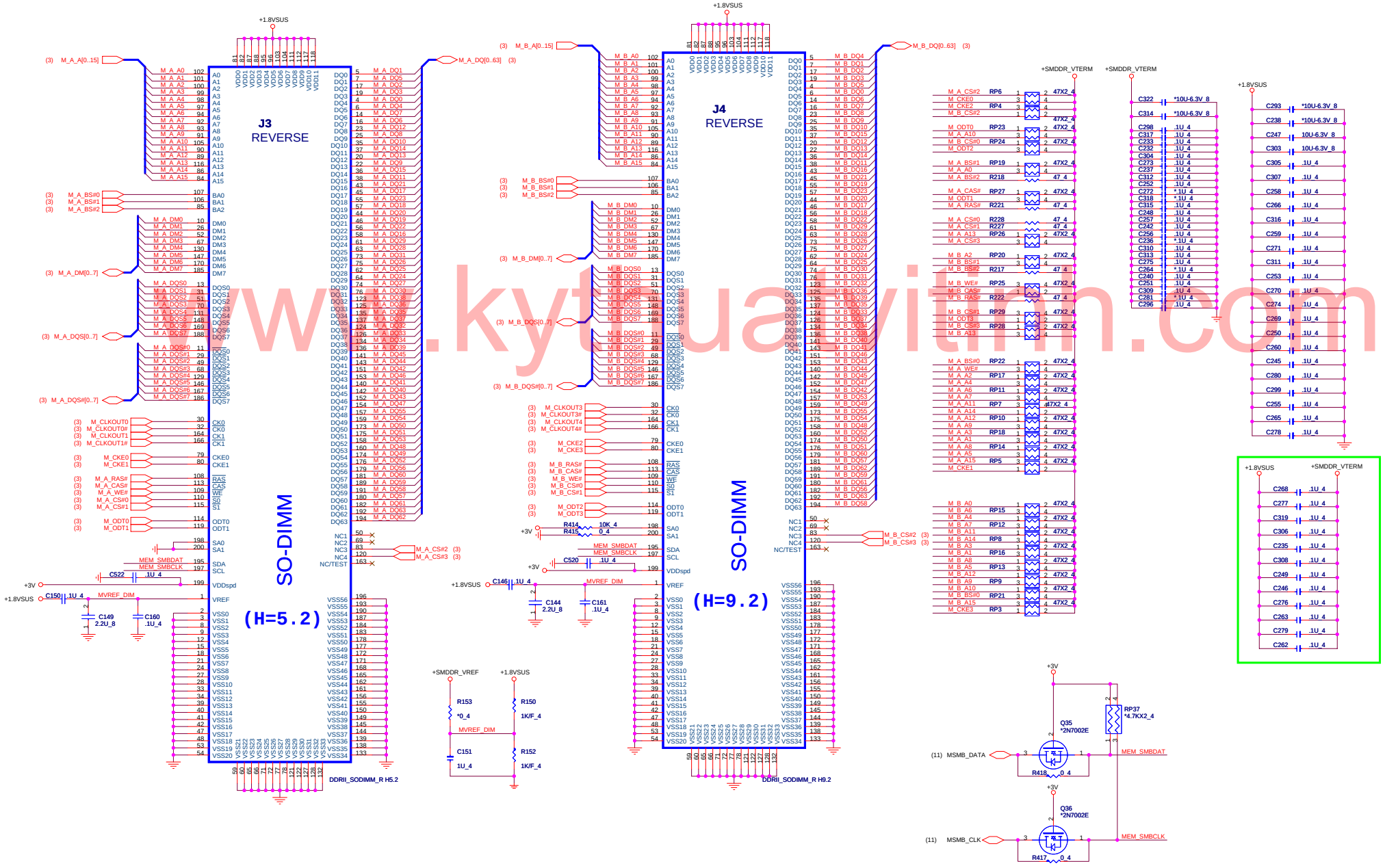

www.kytuatvitim.com

PROJECT : ZO3
Quanta Computer Inc.

Size	Document Number	Rev
	DDR-II SODIMM*2	1A

Date: Wednesday, April 25, 2007 Sheet 6 of 30

A1:AJMCP670T00
A2:AJMCP670T04

U20A

MCP67 1 OF 7

HT

MCP67 Used UMA Only	
MCP67 Signal Name	Component
RGB_DAC_RSET RGB_DAC_VREF DDC_DATA0	STUFF STUFF *10K LEAVE NC
TV_DAC_RSET TV_DAC_VREF	STUFF STUFF
IFPAB_RST IFPAB_VPROBE DDC_DATA2 HPLUG_DET3	STUFF STUFF *10K LEAVE NC 22K PULLDOWN
HDMI_RSET HDMI_VPROBE DDC_DATA3_R HDCP_ROM_SDATA HPLUG_DET2_R	STUFF STUFF 10K PULLHIGH 10K PULLHIGH 6.2K PULLDOWN

MCP67 Unused UMA Only	
MCP67 Signal Name	Component
RGB_DAC_RSET RGB_DAC_VREF DDC_DATA0	STUFF STUFF 10K PULLHIGH
TV_DAC_RSET TV_DAC_VREF	STUFF STUFF
IFPAB_RST IFPAB_VPROBE DDC_DATA2 HPLUG_DET3	STUFF STUFF 10K PULLHIGH 22K PULLDOWN
HDMI_RSET HDMI_VPROBE DDC_DATA3_R HDCP_ROM_SDATA HPLUG_DET2_R	STUFF STUFF 10K PULLHIGH 10K PULLHIGH 6.2K PULLDOWN

(2) HT_TXD[15..0]
HT_TXD0 AF16, HT_TXD1 AH16, HT_TXD2 AJ15, HT_TXD3 AK16, HT_TXD4 AG17, HT_TXD5 AL17, HT_TXD6 AL18, HT_TXD7 AJ19, HT_TXD8 AD14, HT_TXD9 AF14, HT_TXD10 AH14, HT_TXD11 AL13, HT_TXD12 AC15, HT_TXD13 AD16, HT_TXD14 AE17, HT_TXD15 AB17

(2) HT_TXD#[15..0]
HT_TXD#0 AG16, HT_TXD#1 AJ16, HT_TXD#2 AK15, HT_TXD#3 AL16, HT_TXD#4 AE17, HT_TXD#5 AK17, HT_TXD#6 AK18, HT_TXD#7 AK19, HT_TXD#8 AE14, HT_TXD#9 AG14, HT_TXD#10 AJ14, HT_TXD#11 AK13, HT_TXD#12 AD15, HT_TXD#13 AE16, HT_TXD#14 AD17, HT_TXD#15 AC17

HT_MCP_RXD0_P, HT_MCP_RXD1_P, HT_MCP_RXD2_P, HT_MCP_RXD3_P, HT_MCP_RXD4_P, HT_MCP_RXD5_P, HT_MCP_RXD6_P, HT_MCP_RXD7_P, HT_MCP_RXD8_P, HT_MCP_RXD9_P, HT_MCP_RXD10_P, HT_MCP_RXD11_P, HT_MCP_RXD12_P, HT_MCP_RXD13_P, HT_MCP_RXD14_P, HT_MCP_RXD15_P
HT_MCP_RXD0_N, HT_MCP_RXD1_N, HT_MCP_RXD2_N, HT_MCP_RXD3_N, HT_MCP_RXD4_N, HT_MCP_RXD5_N, HT_MCP_RXD6_N, HT_MCP_RXD7_N, HT_MCP_RXD8_N, HT_MCP_RXD9_N, HT_MCP_RXD10_N, HT_MCP_RXD11_N, HT_MCP_RXD12_N, HT_MCP_RXD13_N, HT_MCP_RXD14_N, HT_MCP_RXD15_N

HT_MCP_TXD0_P AK27 HT_RXD0, HT_MCP_TXD1_P AK26 HT_RXD1, HT_MCP_TXD2_P AK25 HT_RXD2, HT_MCP_TXD3_P AL24 HT_RXD3, HT_MCP_TXD4_P AK22 HT_RXD4, HT_MCP_TXD5_P AK21 HT_RXD5, HT_MCP_TXD6_P AH21 HT_RXD6, HT_MCP_TXD7_P AL20 HT_RXD7, HT_MCP_TXD8_P AG27 HT_RXD8, HT_MCP_TXD9_P AF25 HT_RXD9, HT_MCP_TXD10_P AH25 HT_RXD10, HT_MCP_TXD11_P AE23 HT_RXD11, HT_MCP_TXD12_P AD21 HT_RXD12, HT_MCP_TXD13_P AE21 HT_RXD13, HT_MCP_TXD14_P AC20 HT_RXD14, HT_MCP_TXD15_P AE19 HT_RXD15
HT_RXD[15..0] (2)

HT_MCP_TXD0_N AJ27 HT_RXD#0, HT_MCP_TXD1_N AL26 HT_RXD#1, HT_MCP_TXD2_N AL25 HT_RXD#2, HT_MCP_TXD3_N AK24 HT_RXD#3, HT_MCP_TXD4_N AL22 HT_RXD#4, HT_MCP_TXD5_N AL21 HT_RXD#5, HT_MCP_TXD6_N AJ21 HT_RXD#6, HT_MCP_TXD7_N AM20 HT_RXD#7, HT_MCP_TXD8_N AH27 HT_RXD#8, HT_MCP_TXD9_N AG25 HT_RXD#9, HT_MCP_TXD10_N AJ25 HT_RXD#10, HT_MCP_TXD11_N AE23 HT_RXD#11, HT_MCP_TXD12_N AE21 HT_RXD#12, HT_MCP_TXD13_N AG21 HT_RXD#13, HT_MCP_TXD14_N AD20 HT_RXD#14, HT_MCP_TXD15_N AF19 HT_RXD#15
HT_RXD#[15..0] (2)

(2) HT_CPU_DWNCLK0, (2) HT_CPU_DWNCLK#0, (2) HT_CPU_DWNCLK1, (2) HT_CPU_DWNCLK#1
HT_MCP_RX_CLK0_P AJ17, HT_MCP_RX_CLK0_N AH17, HT_MCP_RX_CLK1_P AL14, HT_MCP_RX_CLK1_N AK14
HT_MCP_TX_CLK0_P AK23 HT_CPU_UPCLK0 (2), HT_MCP_TX_CLK0_N AJ23 HT_CPU_UPCLK#0 (2), HT_MCP_TX_CLK1_P AG23 HT_CPU_UPCLK1 (2), HT_MCP_TX_CLK1_N AH23 HT_CPU_UPCLK#1 (2)

(2) HT_CPU_DWNCTL0, (2) HT_CPU_DWNCTL#0
HT_MCP_RXCTL0_P AH19, HT_MCP_RXCTL0_N AG19, HT_MCP_RXCTL1_P AC18, HT_MCP_RXCTL1_N AD18
HT_MCP_TXCTL0_P AK20 HT_CPU_UPCTL0 (2), HT_MCP_TXCTL0_N AJ20 HT_CPU_UPCTL#0 (2), HT_MCP_TXCTL1_P AD19, HT_MCP_TXCTL1_N AC19

(4) MCP67_THERMIP#, (4) MCP67_PROCHOT#
MCP67_THERMIP# AC13, MCP67_PROCHOT# AB13
THERMTRIP#/GPIO_58(3V), PROCHOT#/GPIO_20(3V_S5)

CLKOUT_200MHZ_P AL28 CPU_CLK (4), CLKOUT_200MHZ_N AM28 CPU_CLK# (4)

HT_MCP_REQ# AD23 HTCPU_REQ#, HT_MCP_STOP# AB20 HTCPU_STOP# (4), HT_MCP_RST# AC21 HTCPU_RST# (4), HT_MCP_PWRGD AD22 HTCPU_PWRGD (4)

+1.2V_HT R351 150/F_4 CPU_CAL_1P2V AM12 HT_MCP_COMP_VDD
R354 150/F_4 CPU_CAL_GND AL12 HT_MCP_COMP_GND

CPU_SBVREF AG28 CPU_SBVREF R336 0_6 +1.2V_HT, C90 .1U_4
CLK200_TERM_GND AJ28 MCP67_CTERM R110 2.37K/F_4

HTCPU_REQ# R337 22K_4 +3V
+3V
MCP67_THERMIP# R355 *300_4

Datasheet error its should be +1.8 plane
+1.8VSUS
MCP67_THERMIP# R352 300_4
HTCPU_STOP# R350 300_4
HTCPU_RST# R348 300_4
HTCPU_PWRGD R338 300_4
MCP67_PROCHOT# R356 300_4

FOR UMA ONLY

R344 IV@150_4 INT_CRT_RED, R343 IV@150_4 INT_CRT_GRN, R342 IV@150_4 INT_CRT_BLU
R117 IV@150_4 INT_TV_C/R, R120 IV@150_4 INT_TV_Y/G, R113 IV@150_4 INT_TV_COMP
C480 IV@27P_4, Y5 IV@27MHZ, C483 IV@27P_4

B2B: changed CAP value

(14) INT_CRT_RED B21, (14) INT_CRT_GRN C21, (14) INT_CRT_BLU B22
(14) INT_HSYNC G21, (14) INT_VSYNC H21
R131 124/F_4 RGB_DAC_RSET K21, C125 .01U_4 RGB_DAC_VREF D21
(14) INT_CRT_DDCCLK G8, (14) INT_CRT_DDCDAT H8
(14) INT_TV_C/R C23, (14) INT_TV_Y/G C22, (14) INT_TV_COMP D23
R119 124/F_4 TV_DAC_RSET E23, C116 .01U_4 TV_DAC_VREF H22
TV_XTALIN E17, TV_XTALOUT F17

RGB_DAC_RED, RGB_DAC_GREEN, RGB_DAC_BLUE, RGB_DAC_HSYNC, RGB_DAC_VSYNC, RGB_DAC_RSET, RGB_DAC_VREF, DDC_CLK0, DDC_DATA0, TV_DAC_RED, TV_DAC_GREEN, TV_DAC_BLUE, TV_DAC_RSET, TV_DAC_VREF, TV_XTALIN, TV_XTALOUT

DACS

[LVDS]

IFPA_TXC_P AE30 INT_TXLCLKOUT+ (14), IFPA_TXC_N AE31 INT_TXLCLKOUT- (14)
IFPA_TXD0_P AC30 INT_TXLOUT0+ (14), IFPA_TXD0_N AC29 INT_TXLOUT0- (14), IFPA_TXD1_P AC27 INT_TXLOUT1+ (14), IFPA_TXD1_N AC28 INT_TXLOUT1- (14), IFPA_TXD2_P AD30 INT_TXLOUT2+ (14), IFPA_TXD2_N AD29 INT_TXLOUT2- (14), IFPA_TXD3_P AD31 INT_TXLOUT3+ T54, IFPA_TXD3_N AD32 INT_TXLOUT3- T56
IFPB_TXC_P AJ31, IFPB_TXC_N AJ32
IFPB_TXD4_P AE28, IFPB_TXD4_N AE29, IFPB_TXD5_P AE30, IFPB_TXD5_N AE31, IFPB_TXD6_P AG30, IFPB_TXD6_N AG29, IFPB_TXD7_P AH31, IFPB_TXD7_N AH30

C3A: Remove C77,R331 for Nvidia suggest.

IFPAB_VPROBE AB30 IFPAB_VPROBE C77 *.01U_4, IFPAB_RSET AB31 IFPAB_RST R331 *1K/F_4
DDC_CLK2 L21 INT_LVDS_EDIDCLK (14), DDC_DATA2 J22 INT_LVDS_EDIDDATA (14)
LCD_PANEL_PWR AE27 INT_LVDS_DIGON (14), LCD_BKL_ON AE25 INT_LVDS_BLON (16), LCD_BKL_CTL AD24 L_BKLT_CTRL (14)

FLAT PANEL

HDCP_ROM_SCLK R114 *10K_4 HDCP_ROM_SCLK AD25
HDCP_ROM_SDATA R335 10K_4 HDCP_ROM_SDATA AC26
DDC_CLK3 R102 *10K_4 DDC_CLK3_R L22
DDC_DATA3 R103 10K_4 DDC_DATA3_R K22
+3V
HPLUG_DET2 R333 6.2K_4 HPLUG_DET2_R AL32
HDMI_VPROBE C426 *.1U_4 HDMI_VPROBE AK32, HDMI_RSET R332 *1K/F_4 HDMI_RSET AK31
+3V R164 EV@2.2K_4 INT_CRT_DDCDAT, +3V R95 EV@2.2K_4 INT_LVDS_EDIDDATA
HDMI_TXC_P T62 HDMI_TXC_P_R AL29, HDMI_TXC_N T60 HDMI_TXC_N_R AM29

C3A: Remove C426,R332 for Nvidia suggest.

UNUSED HDMI ONLY

HDMI_TXD0_P T61 HDMI_TXD0_P_R AK29, HDMI_TXD0_N T55 HDMI_TXD0_N_R AJ29, HDMI_TXD1_P T57 HDMI_TXD1_P_R AM30, HDMI_TXD1_N T59 HDMI_TXD1_N_R AL30, HDMI_TXD2_P T53 HDMI_TXD2_P_R AK30, HDMI_TXD2_N T58 HDMI_TXD2_N_R AJ30

GPIO_6(3V_S5)/FERR/SYS_SERR/IGPU_GPIO_6* U11 MCP67_GPIO6 R168 *8.2K_4 +3V
GPIO_7(3V_S5)/NFERR/SYS_PERR/IGPU_GPIO_7* T11 MCP67_GPIO7 R139 *8.2K_4 +3V

FOR UMA ONLY

B2A: Remove R168,R139

HPLUG_DET3 AE26 HPLUG_DET3 R109 22K_4

FOR DVI IS NOT IMPLEMENTED

MCP67

www.Kynuatvitinh.com

PROJECT : ZO3
Quanta Computer Inc.

Size	Document Number	Rev
	MCP67(HT/VGA/FLAT_PANEL)	1A

Date: Wednesday, April 25, 2007 Sheet 7 of 30

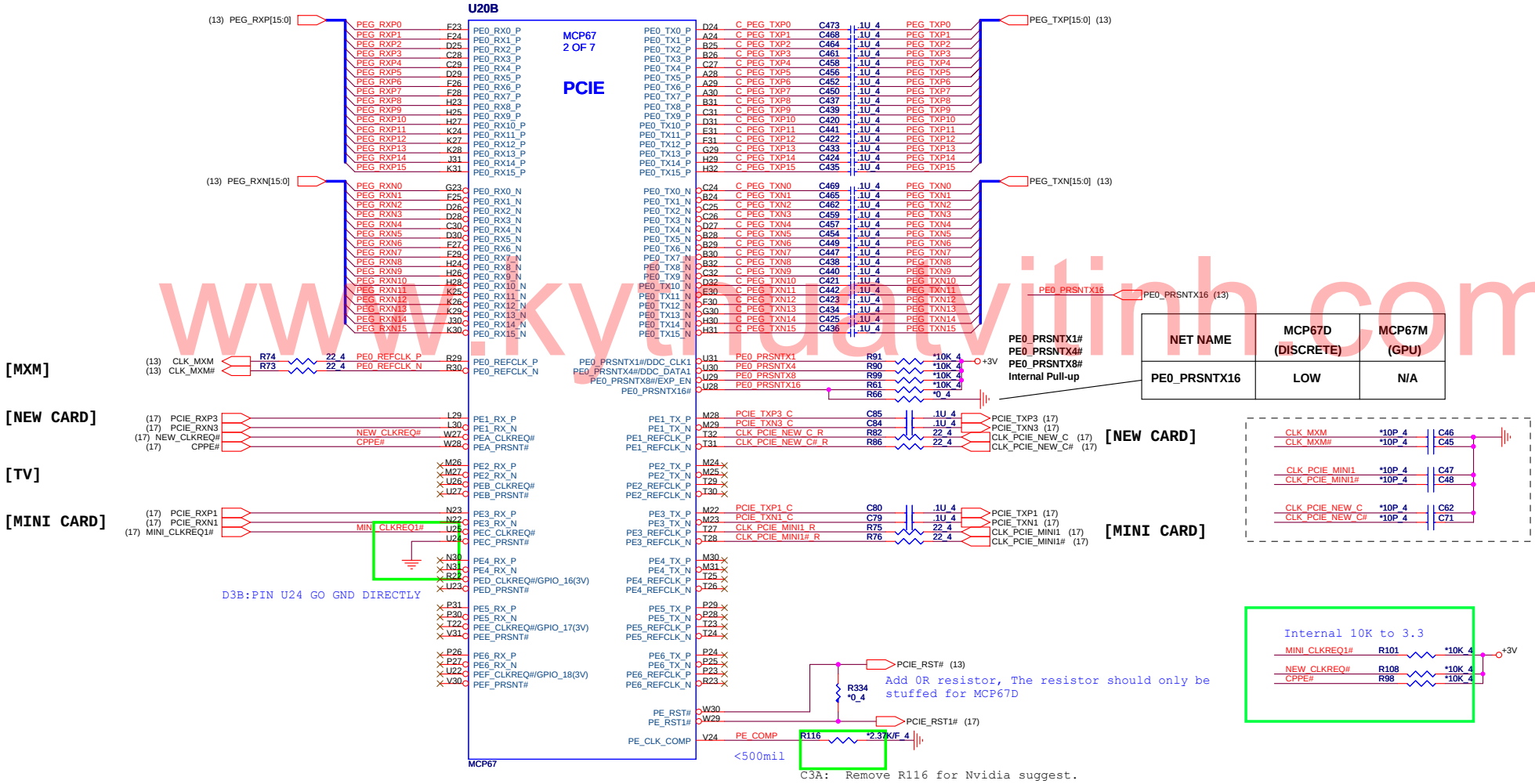

NET NAME	MCP67D (DISCRETE)	MCP67M (GPU)
PE0_PRSNTX16	LOW	N/A

www.kyuatvitinh.com

PROJECT : ZO3
Quanta Computer Inc.

Size	Document Number	Rev
	MCP67(PCI-E)	1A

Date: Wednesday, April 25, 2007 Sheet 8 of 30

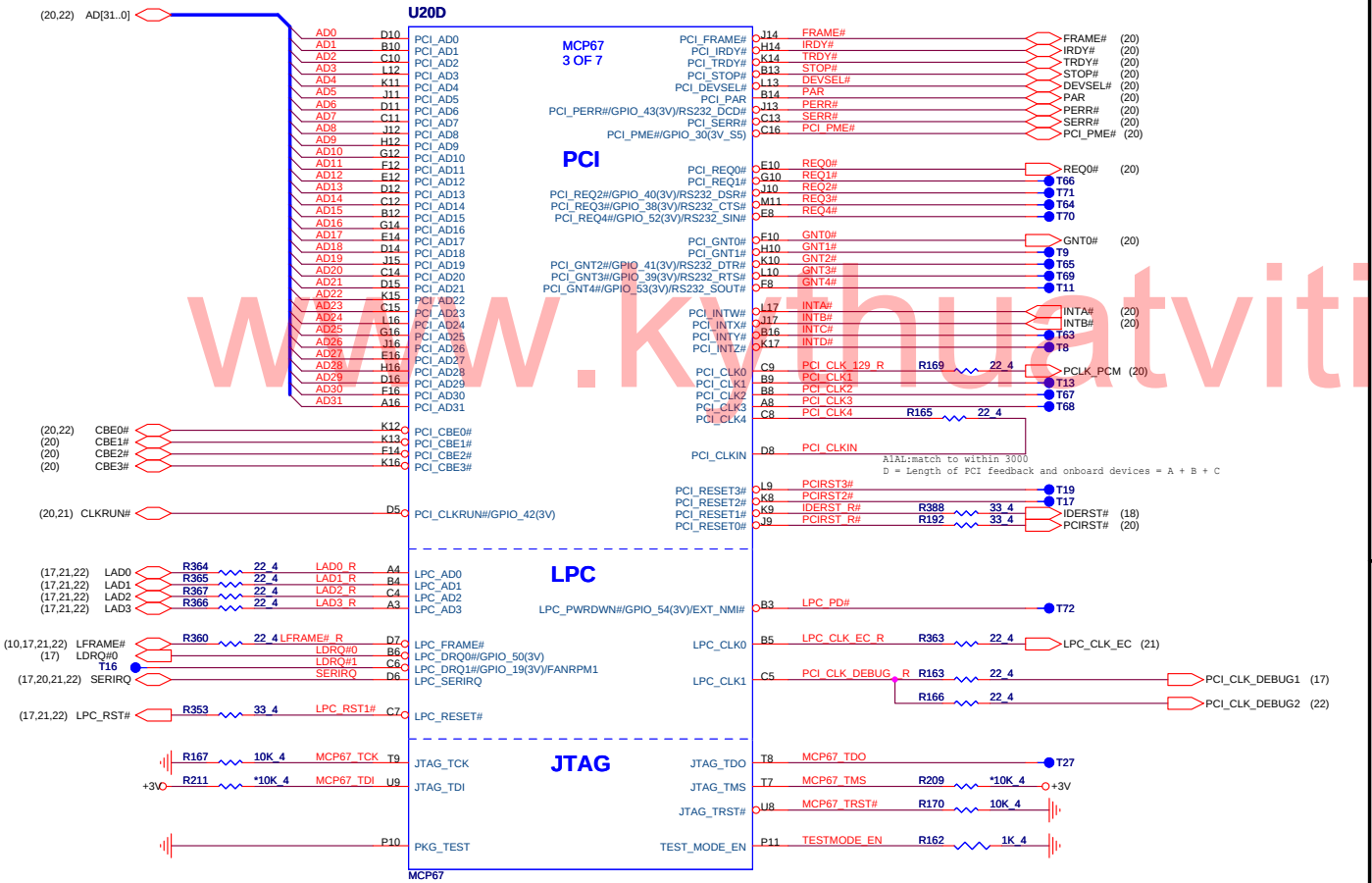

PCI/LPC PULL-UP

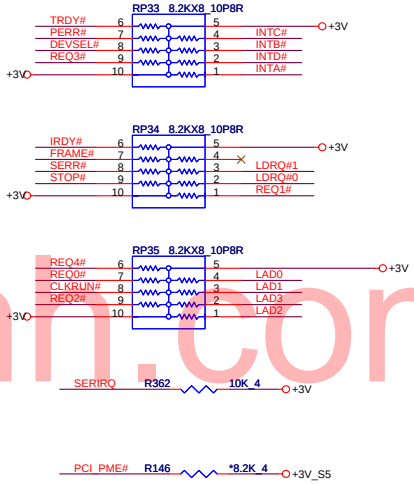

CLOCK BYPASS

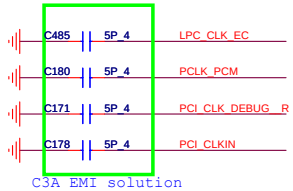

www.kythuatvitinh.com

PROJECT : ZO3
Quanta Computer Inc.

Size	Document Number	Rev
	MCP67(PCI/LPC/JTAG)	1A

Date: Wednesday, April 25, 2007 Sheet 9 of 30

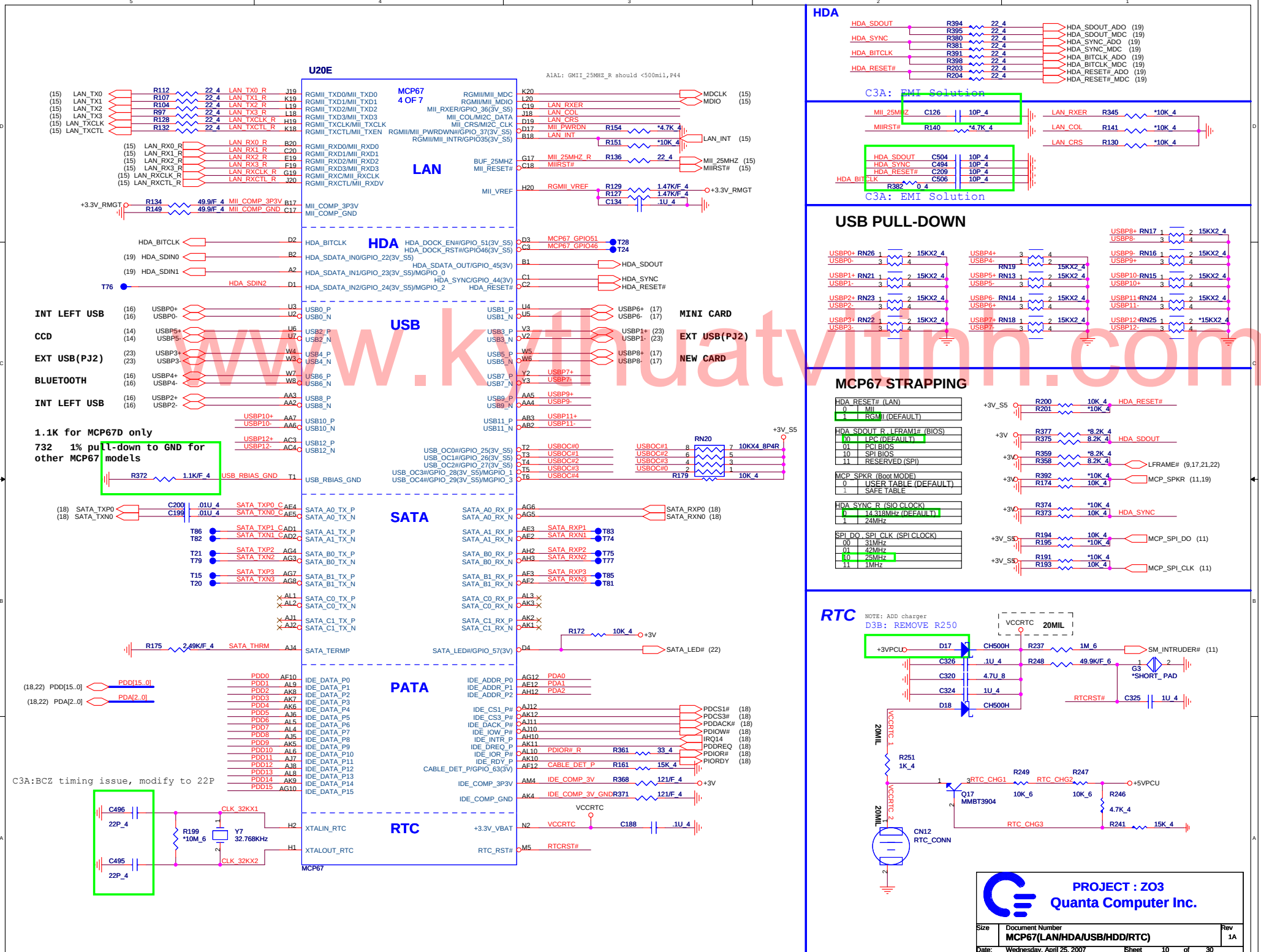

www.kythuatvitinh.com

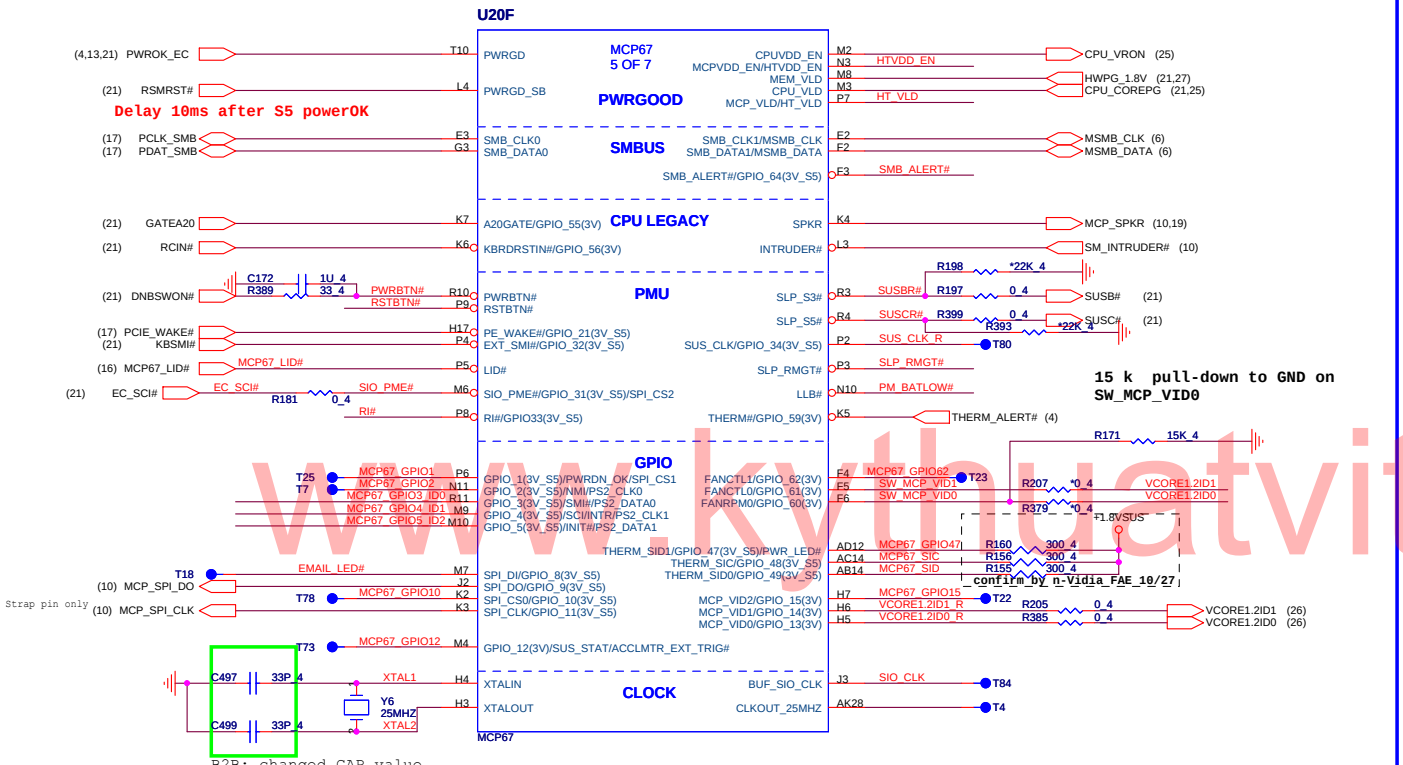

FOR SLEEP MODE CORE POWER CIRCIUT

C3A: Mount Q28, unmount R347

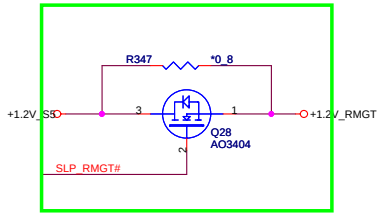

C3A: Mount Q40,Q41,R473,R471, unmount RR74

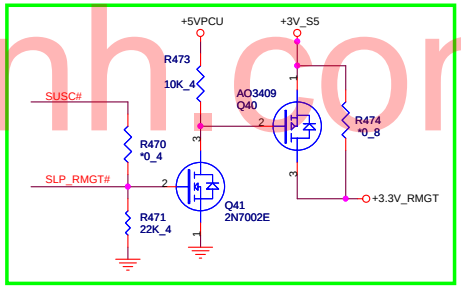

CPU LEGACY PULL-UP

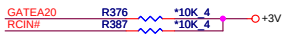

SMB/I2C PULL-UP

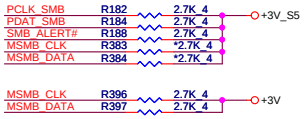

PMU PULL-UP

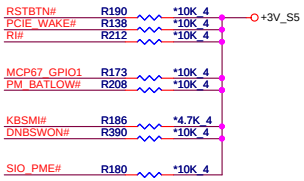

M/B ID for 14"/15"/17"

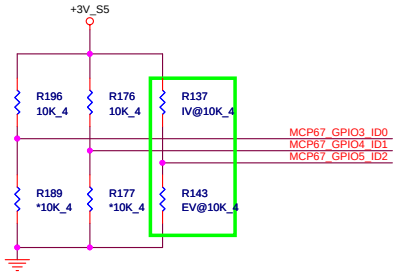

ID0	ID1	ID2	M/B
0	0	0	17" D
0	0	1	X
0	1	0	15" D
1	0	0	15" U
1	0	1	X
1	1	0	14" D
1	1	1	14" U

HyperTransport Link 1.2 V_HT Power Valid

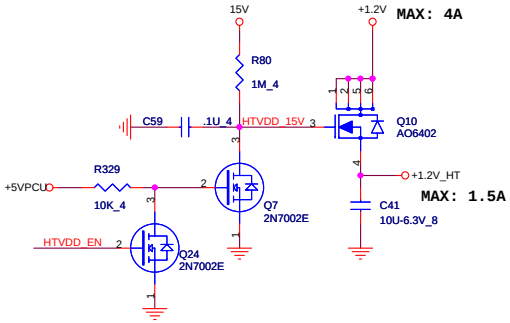

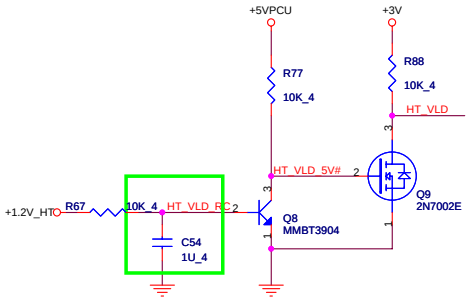

B2B: CHANGED CAP FROM 0.1U TO 1U FOR DELAY HT_VLD

PROJECT : ZO3
Quanta Computer Inc.

Size	Document Number	Rev
	MCP67(SMB/GPIO/CLK/PMU)	1A

Date: Wednesday, April 25, 2007 Sheet 11 of 30

www.kythuatvitinh.com

MCP67 POWER PLANE/GND & BYPASS

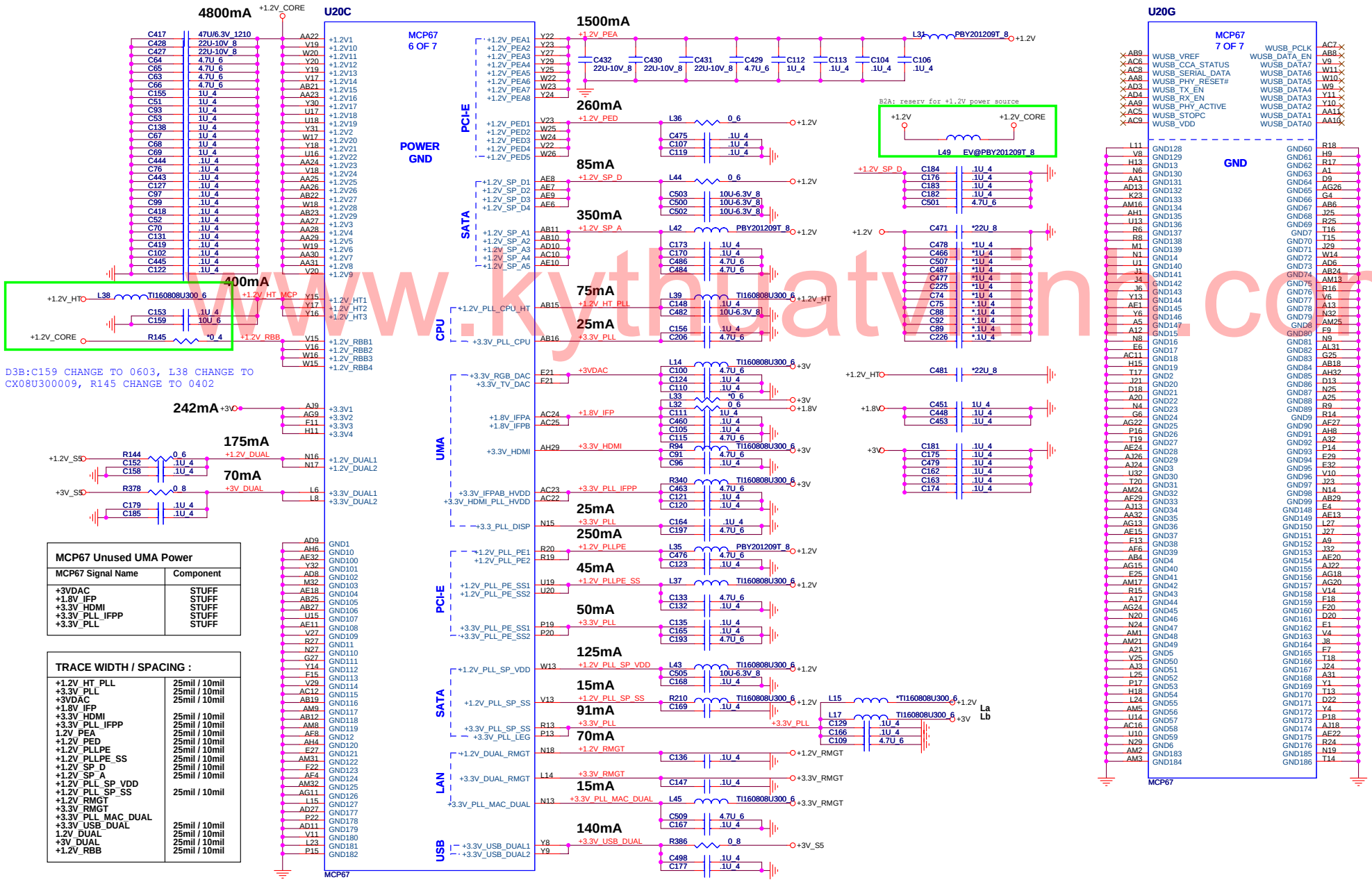

MCP67 Unused UMA Power	
MCP67 Signal Name	Component
+3VDAC	STUFF
+1.8V_IFP	STUFF
+3.3V_HDMI	STUFF
+3.3V_PLL_IFPP	STUFF
+3.3V_PLL	STUFF

TRACE WIDTH / SPACING :	
+1.2V_HT_PLL	25mil / 10mil
+3.3V_PLL	25mil / 10mil
+3VDAC	25mil / 10mil
+1.8V_IFP	
+3.3V_HDMI	25mil / 10mil
+3.3V_PLL_IFPP	25mil / 10mil
1.2V_PEA	25mil / 10mil
+1.2V_PED	25mil / 10mil
+1.2V_PLLPE	25mil / 10mil
+1.2V_PLLPE_SS	25mil / 10mil
+1.2V_SP_D	25mil / 10mil
+1.2V_SP_A	25mil / 10mil
+1.2V_PLL_SP_VDD	
+1.2V_PLL_SP_SS	25mil / 10mil
+1.2V_RMGT	
+3.3V_RMGT	
+3.3V_PLL_MAC_DUAL	
+3.3V_USB_DUAL	25mil / 10mil
1.2V_DUAL	25mil / 10mil
+3V_DUAL	25mil / 10mil
+1.2V_RBB	25mil / 10mil

www.kythiatv.info.com

PROJECT : ZO3
Quanta Computer Inc.

Size	Document Number	Rev
	MCP67(POWER/GND)	1A

Date: Wednesday, April 25, 2007 Sheet 12 of 30

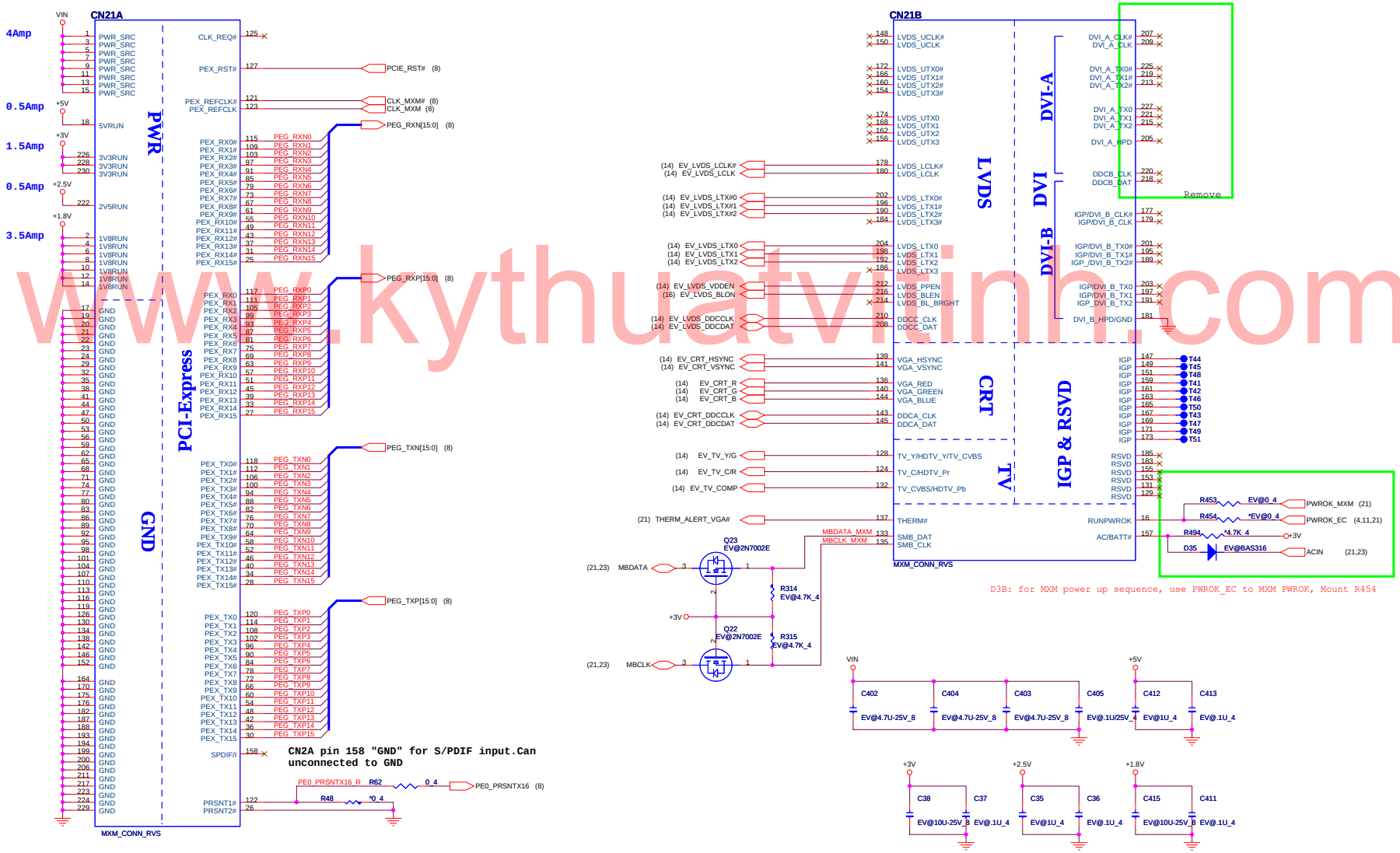

www.kythuatvinh.com

PROJECT : ZO3
Quanta Computer Inc.

Size	Document Number	Rev
	MXM	1A

Date: Wednesday, April 25, 2007 Sheet 13 of 30

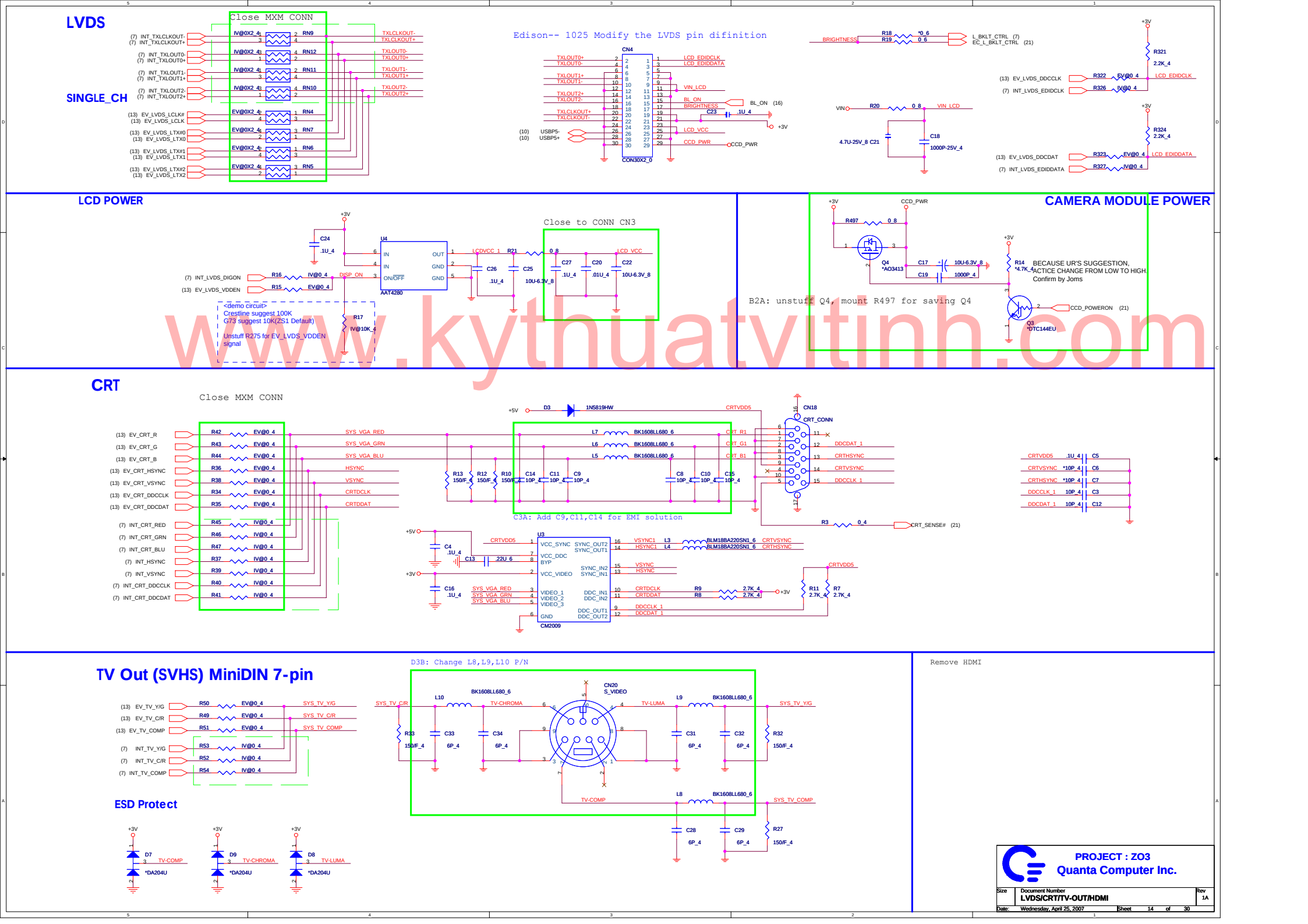

www.kythuatvitinh.com

LAN

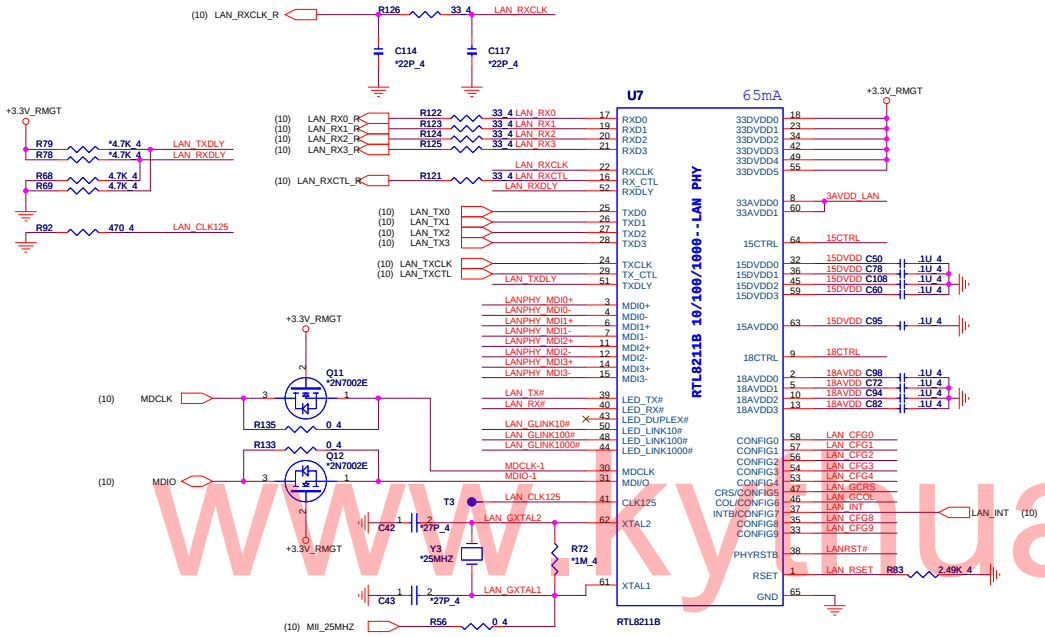

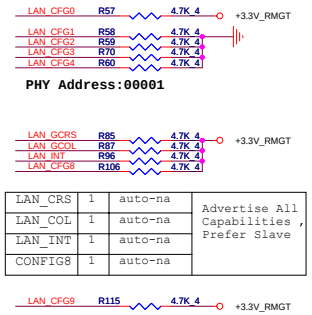

LAN_CRS	1	auto-na	Advertise All Capabilities , Prefer Slave
LAN_COL	1	auto-na	
LAN_INT	1	auto-na	
CONFIG8	1	auto-na	

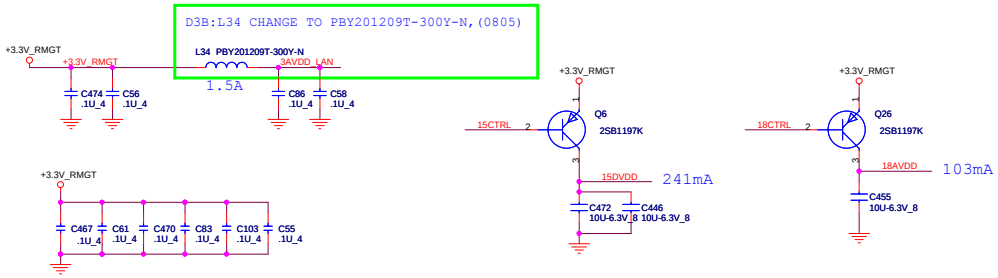

RJ45-11

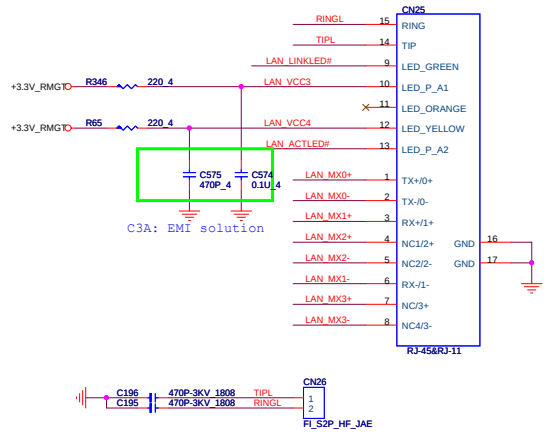

Transformer

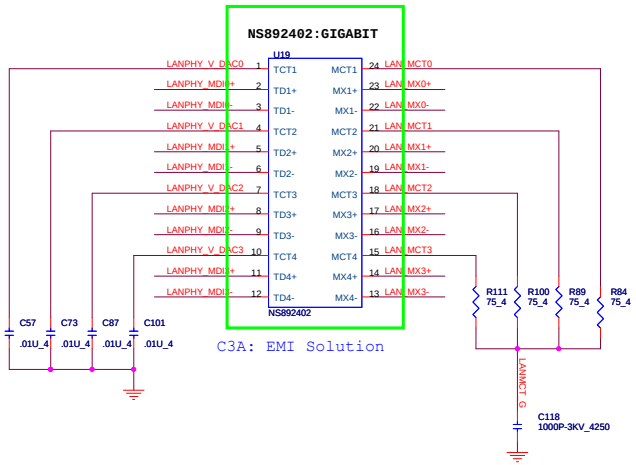

LED Configuration

	Set Register 24 Control Bit=1
LED_LINK1000	LOW=LINK UP (ANY SPEED)
LED_TX	BLINKING=TRANSMITTING OR RECEIVING

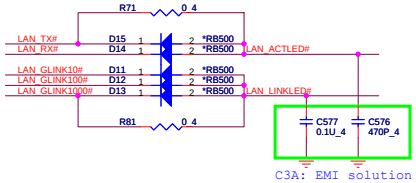

PROJECT : ZO3
Quanta Computer Inc.

Size	Document Number	Rev
	RTL8211B (GigaLAN)	1A

Date: Wednesday, April 25, 2007 Sheet 15 of 30

www.kyluatvitinh.com

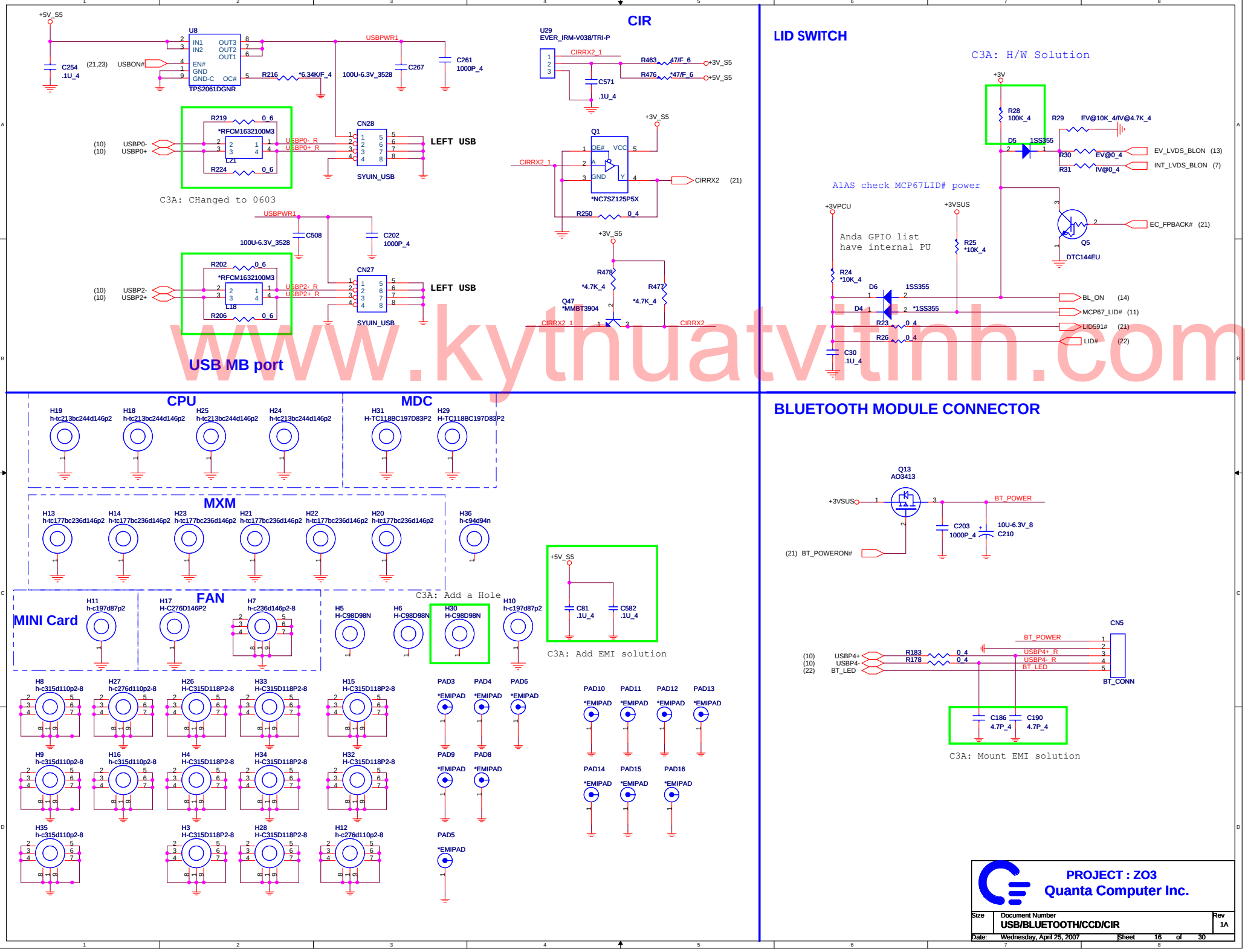

www.kythuatvitinh.com

MINI-Card

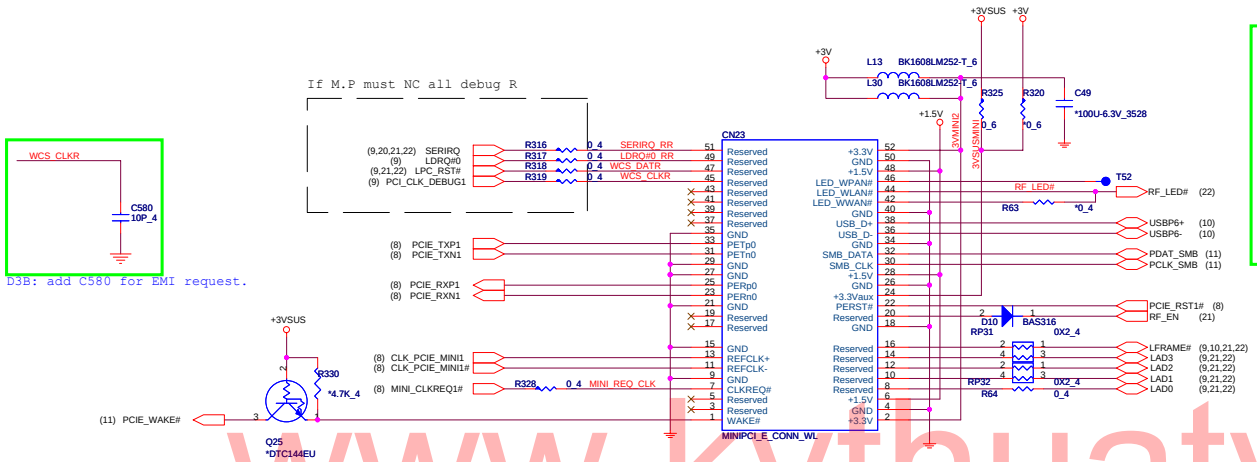

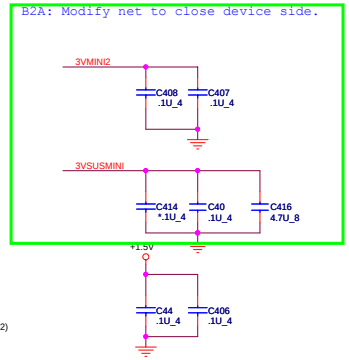

www.kythuatvitinh.com

Need reserve 3G pin define
Check Footprint

New card

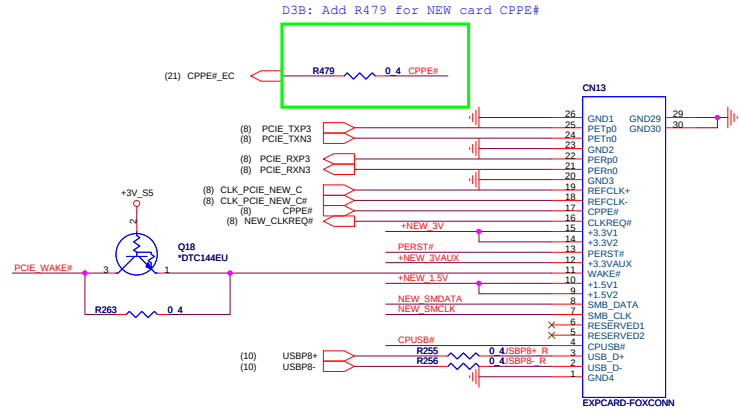

NEW CARD'S POWER SWITCH

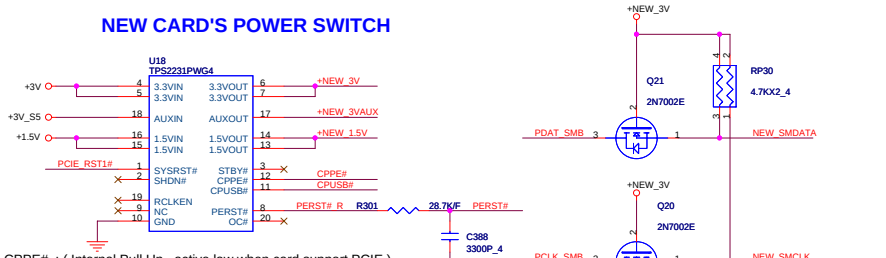

CPPE# : (Internal Pull Up , active low when card support PCIE)
CPUSB# : (Internal Pull Up , active low when card support USB)
SHDN# : (Internal Pull Up)

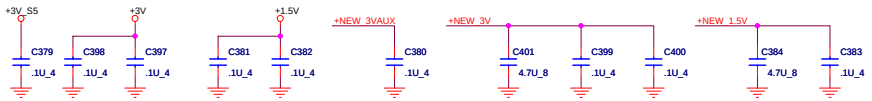

PROJECT : ZO3		
Quanta Computer Inc.		
Size	Document Number: **MINI PCI-E card & NEW CARD**	Rev 1A
Date: Wednesday, April 25, 2007	Sheet 17 of 30	

SATA HDD1

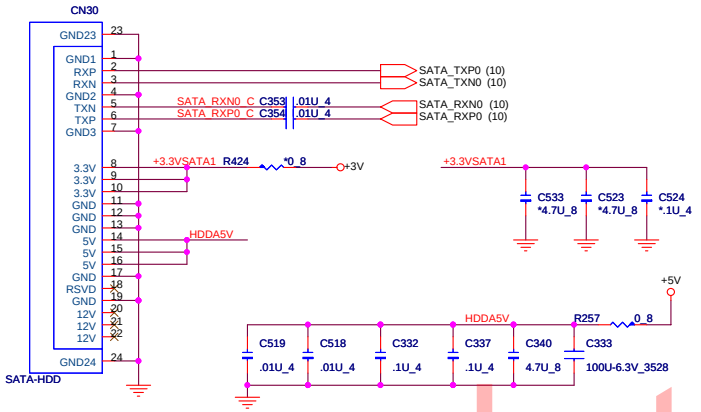

TP SWITCH

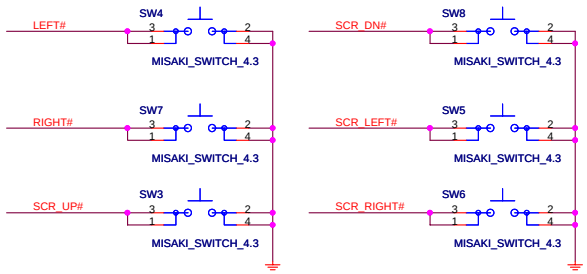

TP CONN

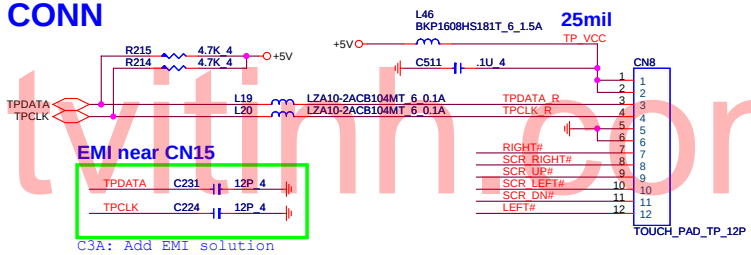

ODD (PATA)

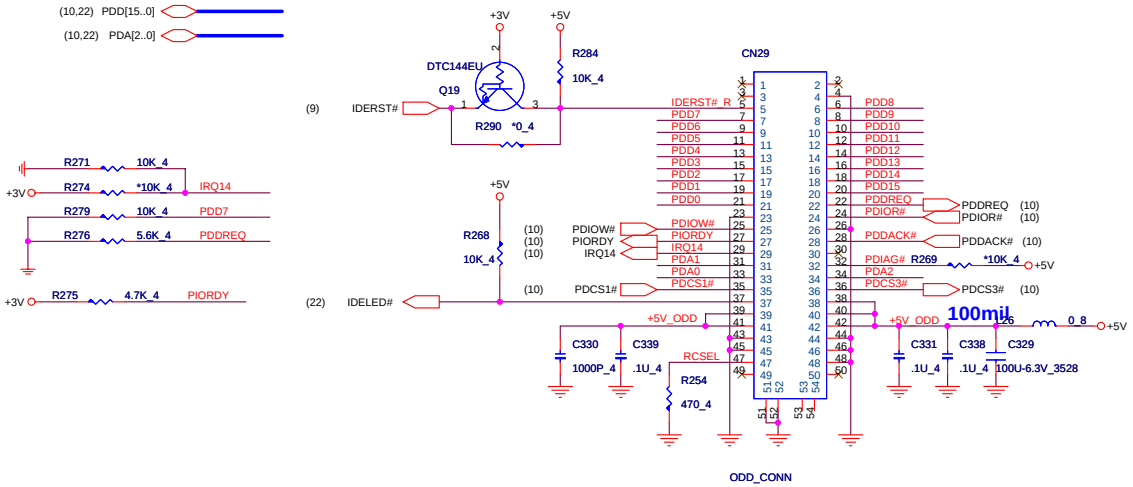

www.kythuatvitinh.com

PROJECT : ZO3
Quanta Computer Inc.

Size	Document Number	Rev
	SATA-HDD & PATA-ODD	1A

Date: Wednesday, April 25, 2007 Sheet 18 of 30

CODEC(ALC268)

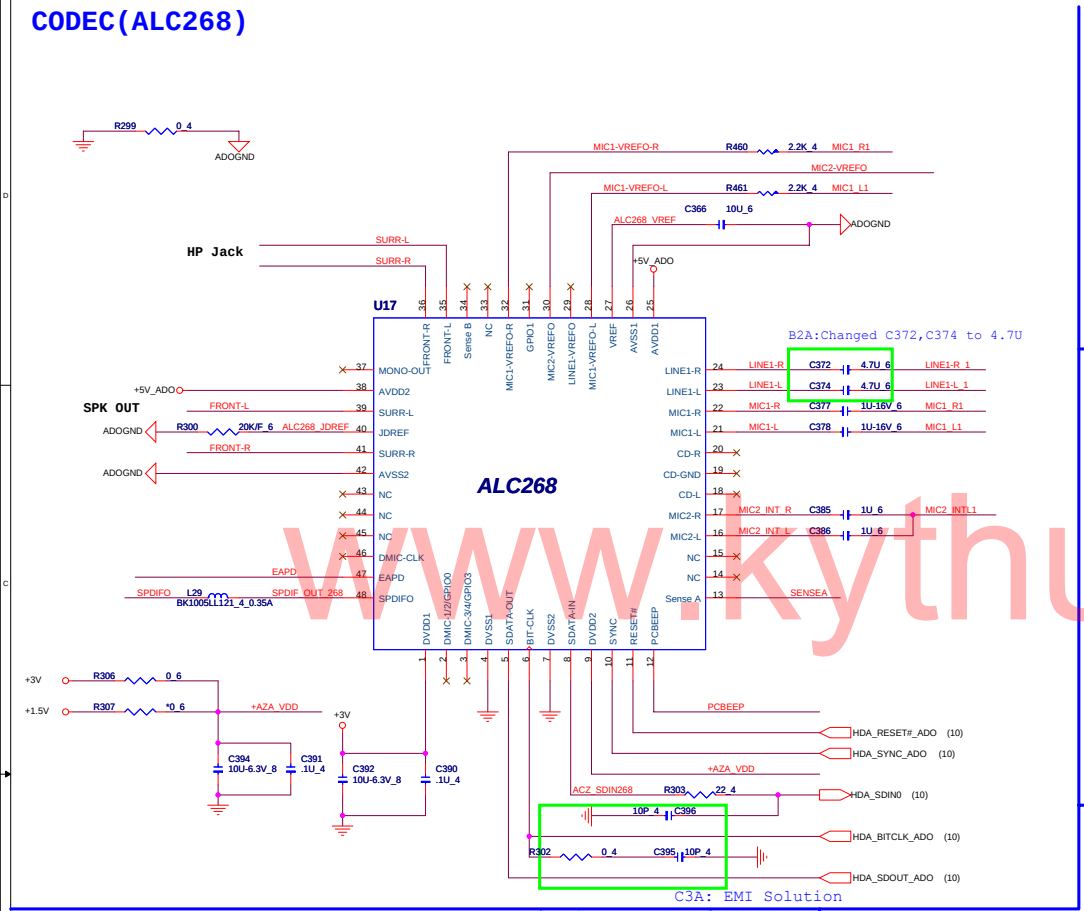

CODEC(ALC268) Power

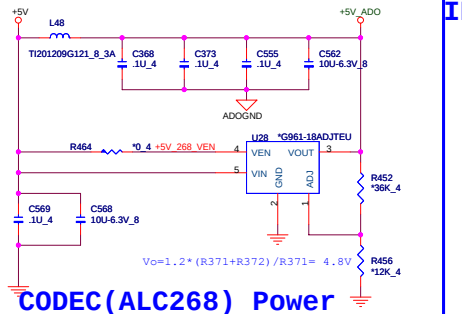

INT MIC array

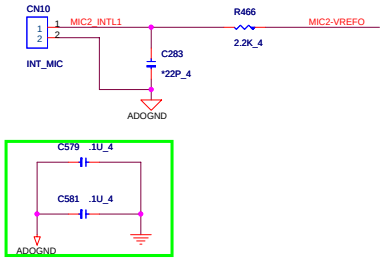

D3B: add C579 ,C581 for EMI request.

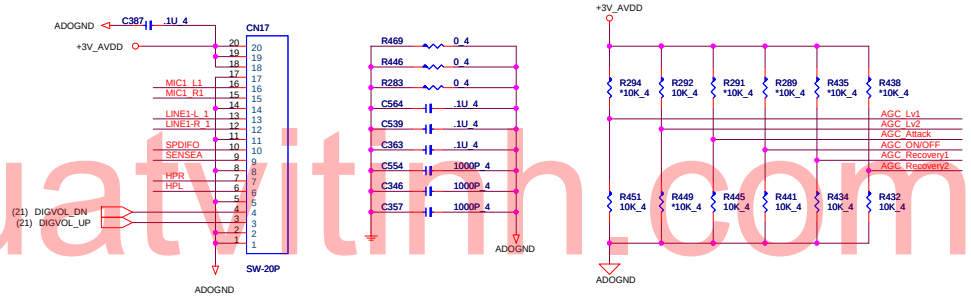

AGC-attack-time selection

AGC_Attack (4 pin)	Attack time
LOW	1 ms
Hi	2 ms

AGC ON/OFF selection

AGC_ON/OFF (6 pin)	AGC ON/OFF
LOW	ON
Hi	OFF

AGC-recovery-time selection

AGC_Recovery1 (10 pin)	AGC_Recovery2 (11 pin)	Recovery Time
LOW	LOW	1.0 s
LOW	Hi	2.0 s
Hi	LOW	4.0 s
Hi	Hi	8.0 s

AGC-on-level selection

AGC_Lv1 (2 pin)	AGC_Lv2 (3 pin)	AGC ON Level	Output Po (RL=8 ohm)
LOW	LOW	9.8 dBV	1.2 W
LOW	Hi	9.0 dBV	1.0 W
Hi	LOW	8.1 dBV	0.8 W
Hi	Hi	6.0 dBV	0.5 W

MDC

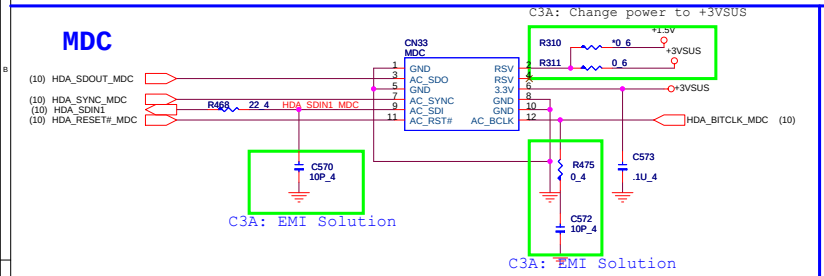

SPK

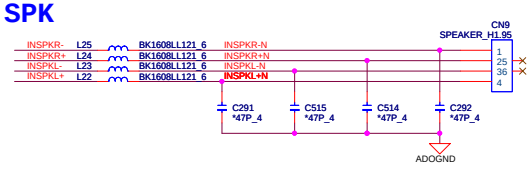

Beep

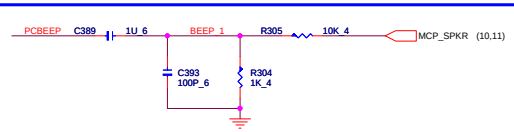

SP_STBY ON/OFF & HP_STBY ON/OFF

SP_STBY1 (33 pin)	SP_STBY2 (34 pin)	SP_STBY ON/OFF
LOW	LOW	ON
LOW	Hi	OFF
Hi	LOW	OFF
Hi	Hi	OFF

HP_STBY1 (35 pin)	HP_STBY2 (36 pin)	HP_STBY ON/OFF
LOW	LOW	ON
LOW	Hi	OFF
Hi	LOW	OFF
Hi	Hi	OFF

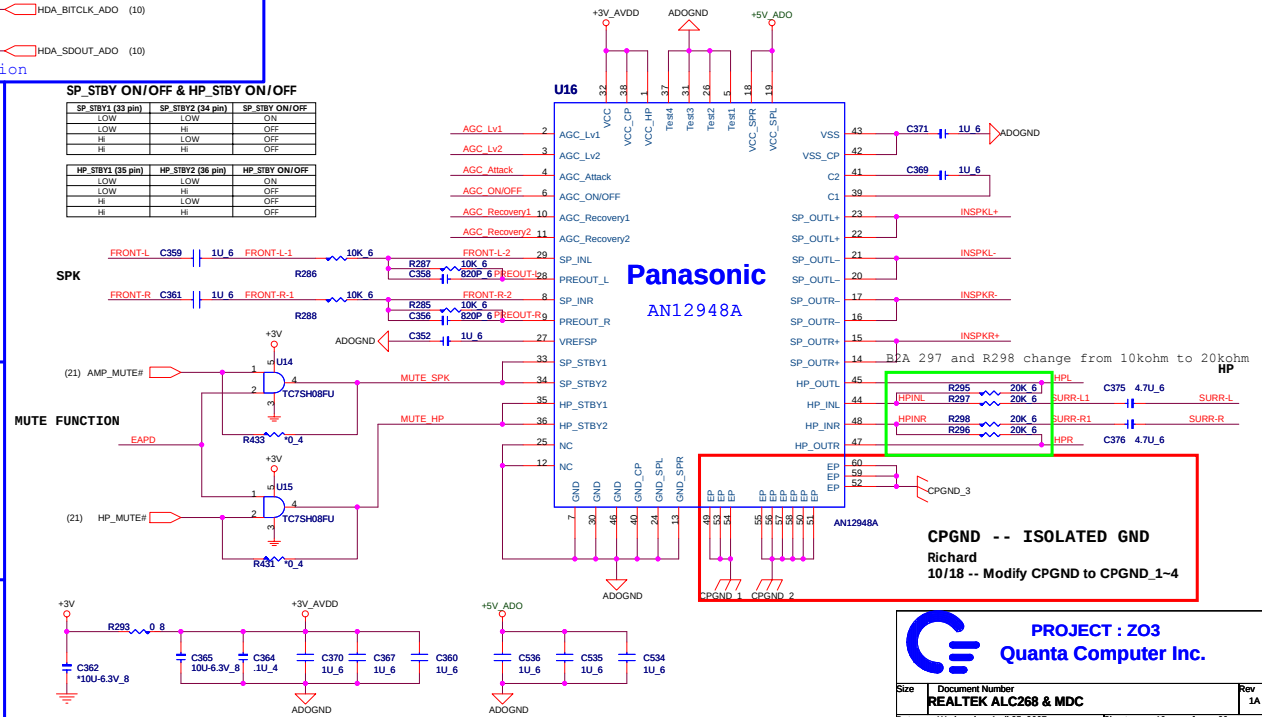

PROJECT : ZO3
Quanta Computer Inc.

Size	Document Number	Rev
	REALTEK ALC268 & MDC	1A

Date: Wednesday, April 25, 2007 Sheet 19 of 30

www.kythuatvitinh.com

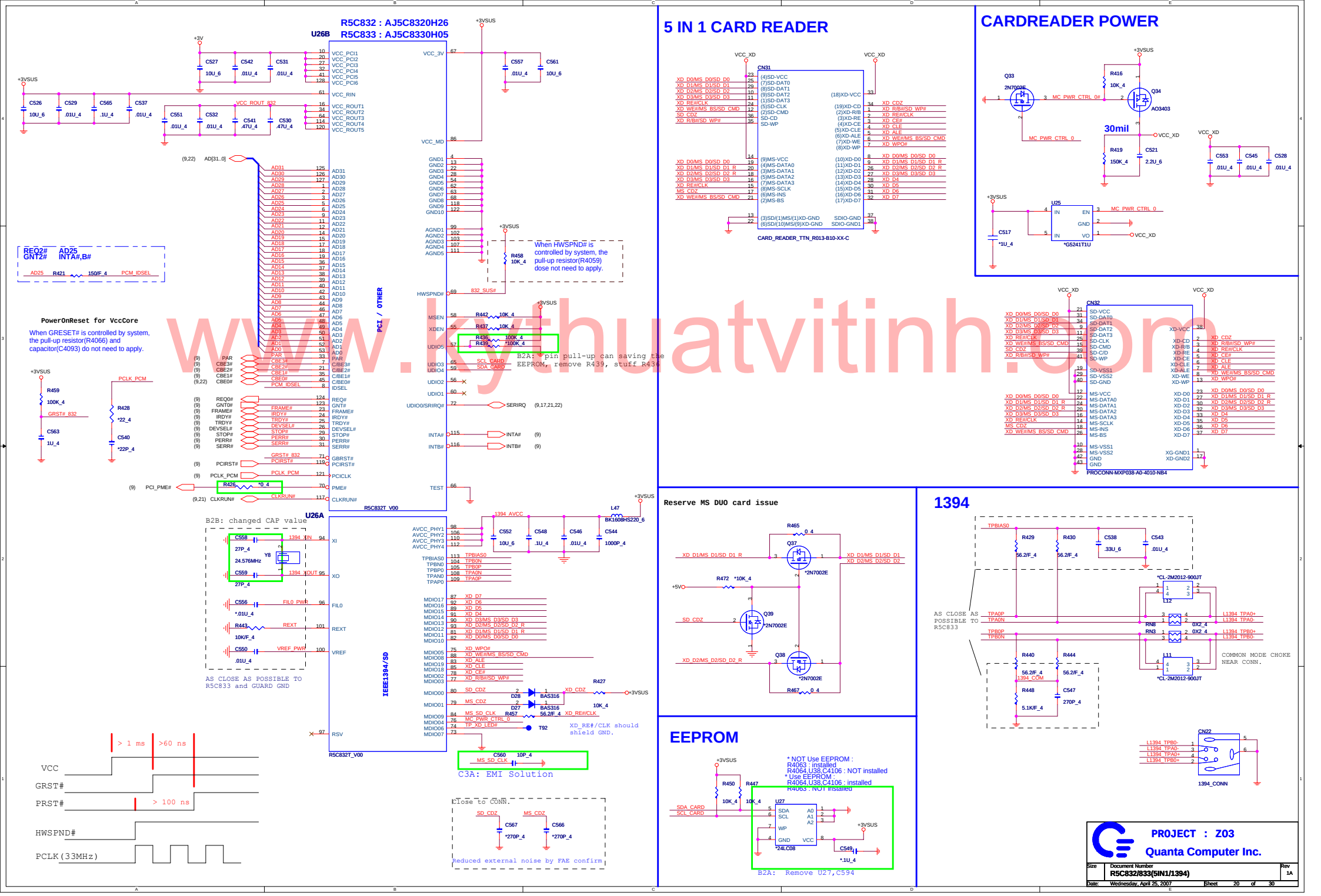

www.kythuatvitinh.com

WPC8769LDG

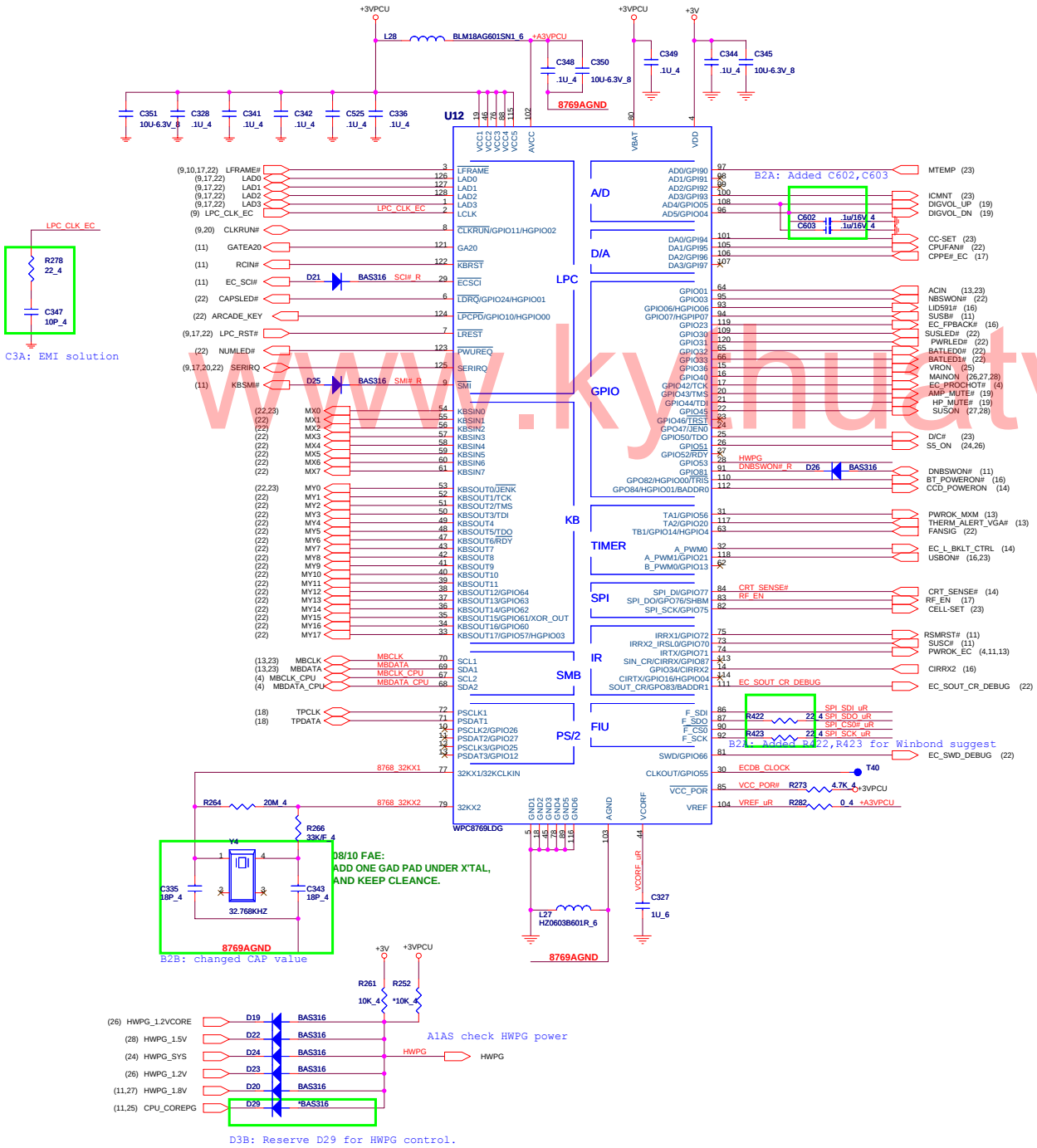

I/O ADDRESS SETTING

	I/O Address	
BADDR1-0	Index	Data
0 0	XOR TREE TEST MODE	
0 1	CORE DEFINED	
1 0	2Eh	2Fh
1 1	164Eh	164Fh

SHBM=0: Enable shared memory with host BIOS

BADDR0 — CCD_POWERON — R281 — 10K_4
BADDR1 — EC_SOUT_CR_DEBUG — R280 — *10K_4
SHBM — RF_EN — R270 — 10K_4

1/13 Comfirm by vendor mail :
Disabled ('1') if using FWH device on LPC.
Enabled ('0') if using SPI flash for both system BIOS and EC firmware

SMBUS PULL-UP

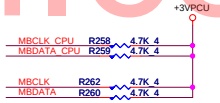

ACER ID

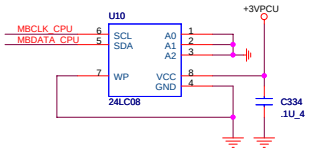

SPI FLASH

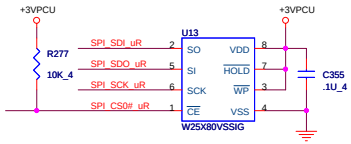

INTERNAL KEYBOARD STRIP SET

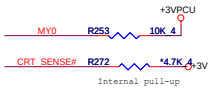

PROJECT :	Z03
Quanta Computer Inc.	
Size	Document Number: PC8769L & FLASH — Rev 1A
Date: Wednesday, April 25, 2007	Sheet 21 of 30

www.kyhuatvitinh.com

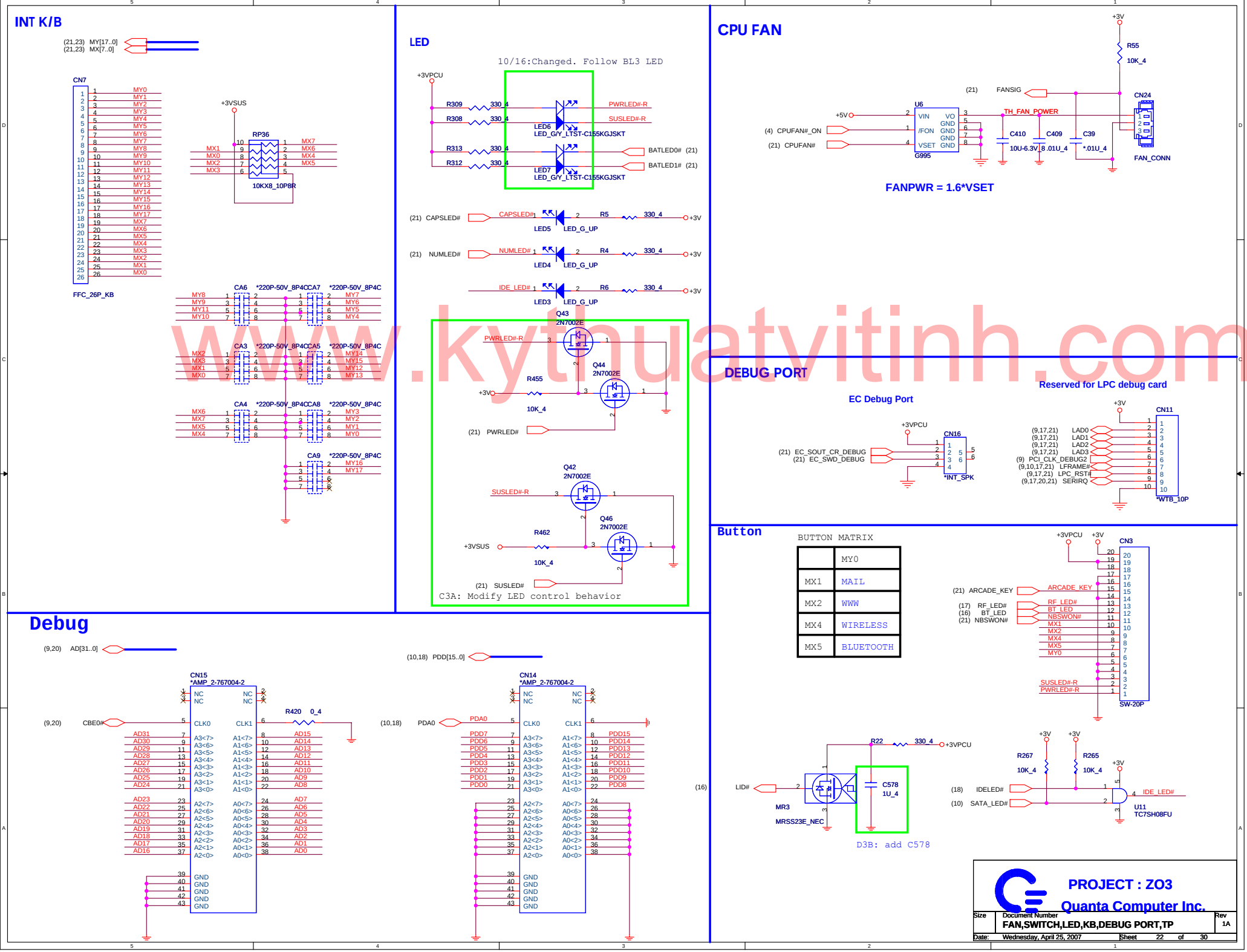

www.kytuatvitinh.com

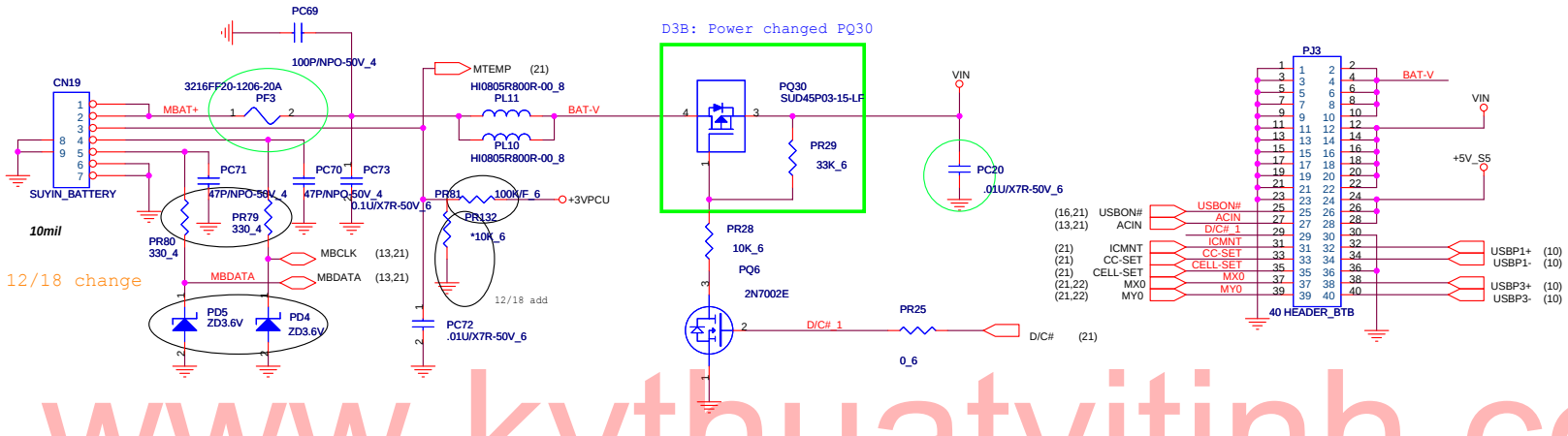

www.kythuatvitinh.com

CELL-SET = Hi ----> Cells = VDD ---->4S
CELL-SET = Low ----> Cells = GND ---->3S

PROJECT : ZO3		
Quanta Computer Inc.		
Size: Custom	Document Number: ISL6251 CHARGER	Rev: A
Date: Wednesday, April 25, 2007	Sheet 23 of 30	

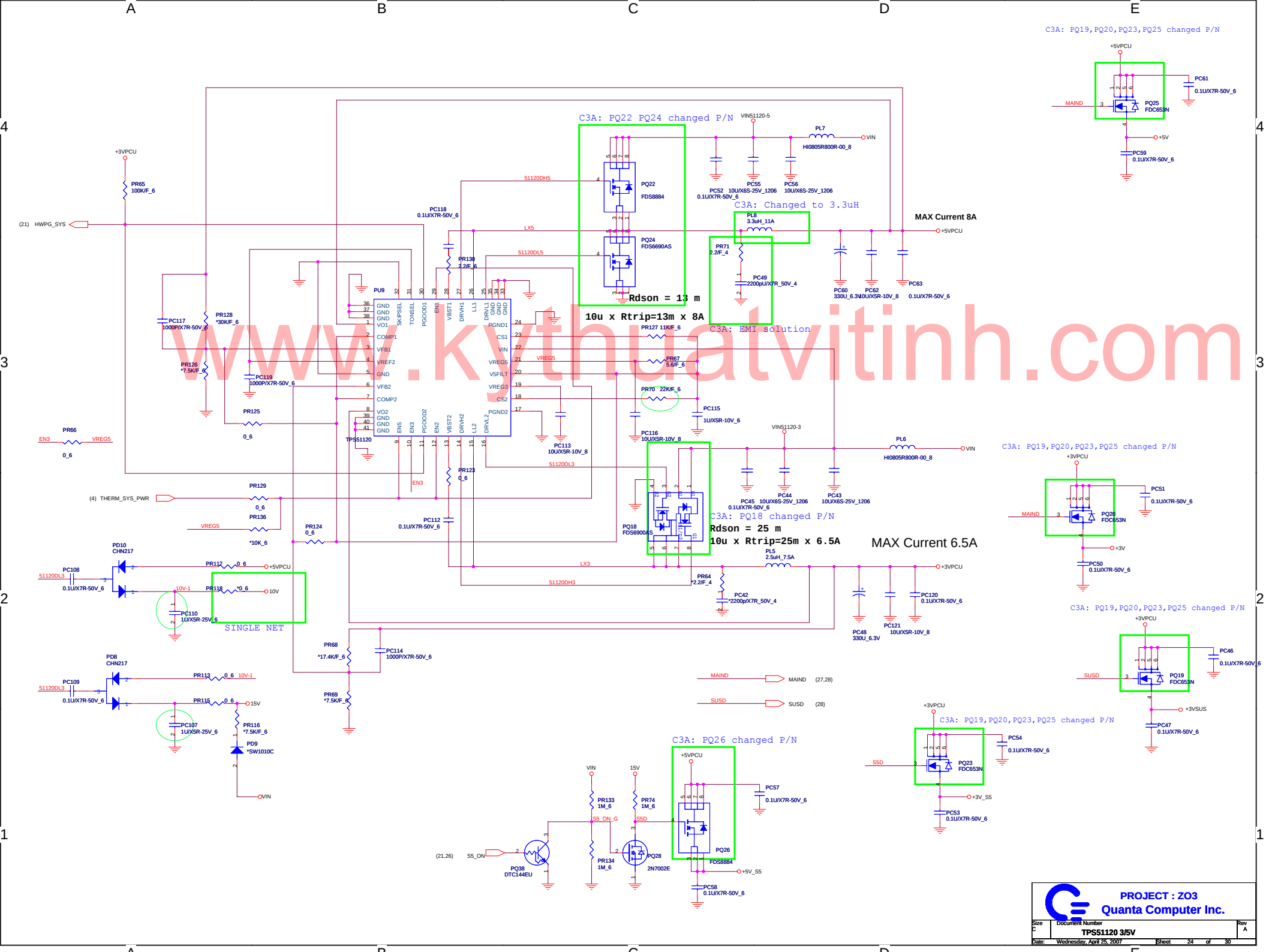

PROJECT : ZO3
Quanta Computer Inc.

Size	Document Number	Rev
C	TPS51120 3/5V	A

Date: Wednesday, April 25, 2007 Sheet 24 of 30

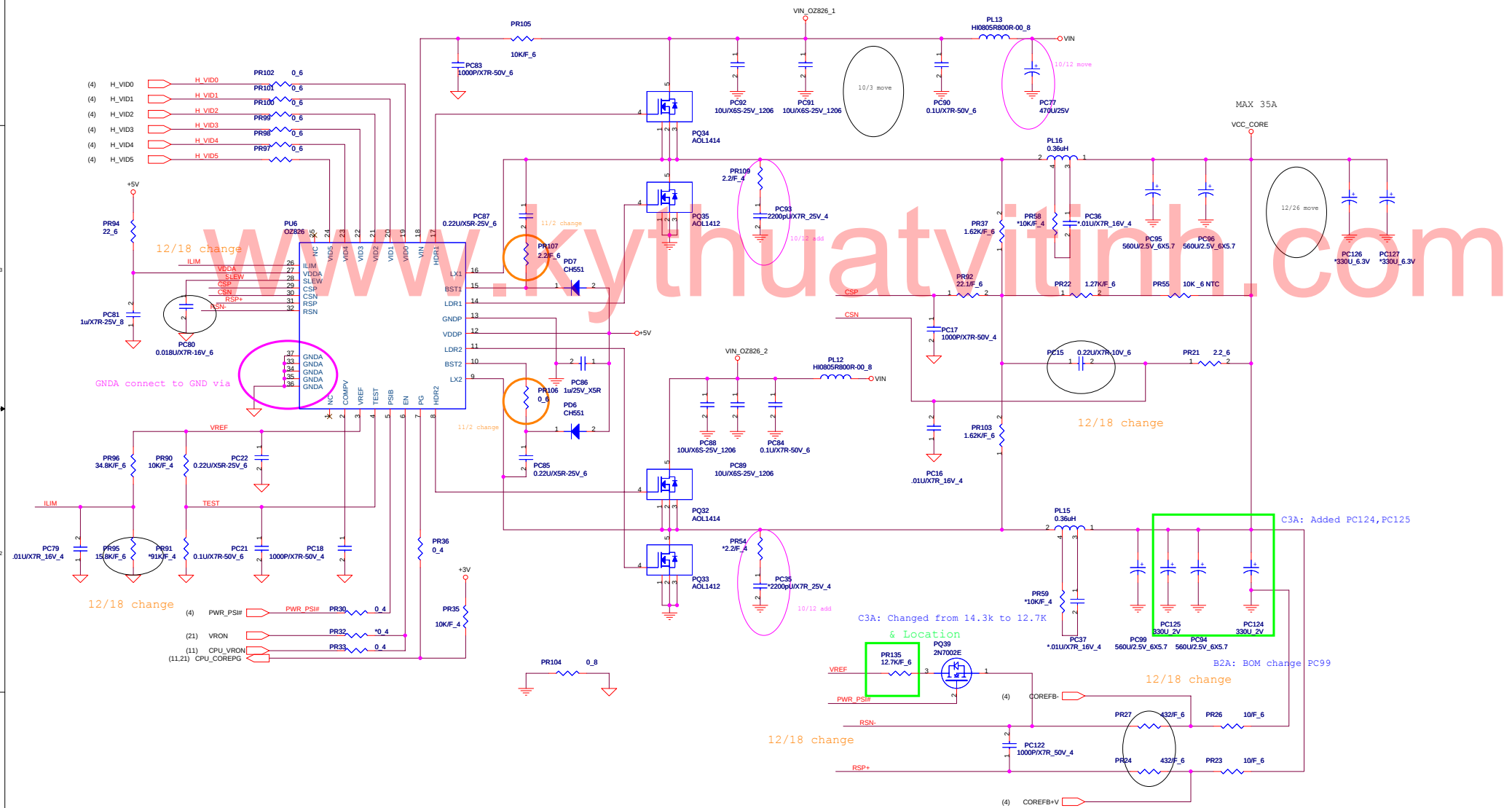

www.kythuatvitinh.com

PROJECT : ZO3			
Quanta Computer Inc.			
Size C	Document Number OZ826 CPU		Rev A
Date: Wednesday, April 25, 2007	Sheet 25 of 30		

VID[1:0]		
VID1	VID0	
0	0	1.2V
0	1	1.1V
1	0	1.0V
1	1	0.9V

MCP67 TABLE

INPUTS		OUTPUTS			VOUT1
G1	G0	OD1	OD2	OD3	
0	0	0.75x(1+R1/R2+R1/R3+R1/R4)			1.2V
1	0	0.75x(1+R1/R2+R1/R3)			1.1V
0	1	0.75x(1+R1/R2+R1/R4)			1.0V
1	1	0.75x(1+R1/R2)			0.9V

SC471A Set

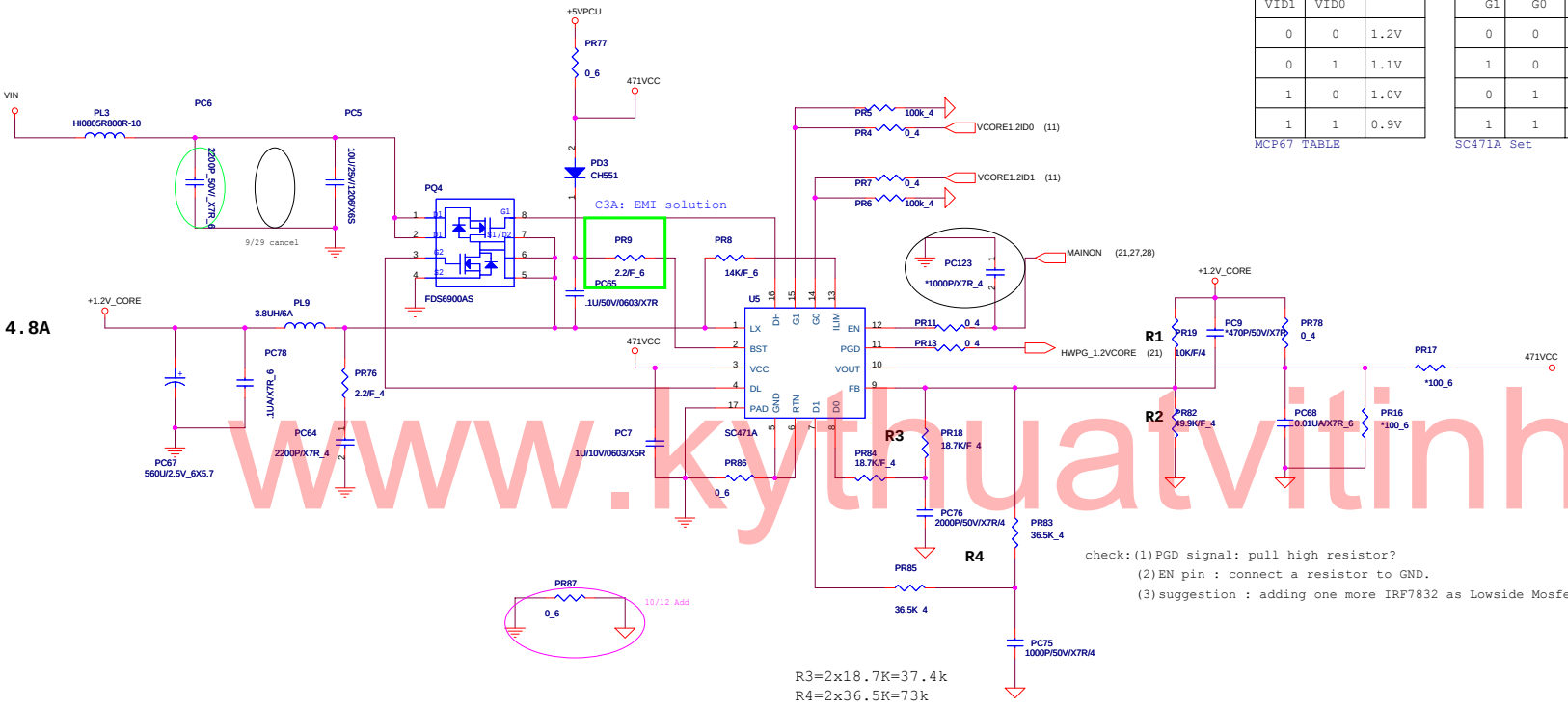

check:(1)PGD signal: pull high resistor?
(2)EN pin : connect a resistor to GND.
(3)suggestion : adding one more IRF7832 as Lowside Mosfet.

R3=2x18.7K=37.4k
R4=2x36.5K=73k

B2B: FOR UMA ONLY

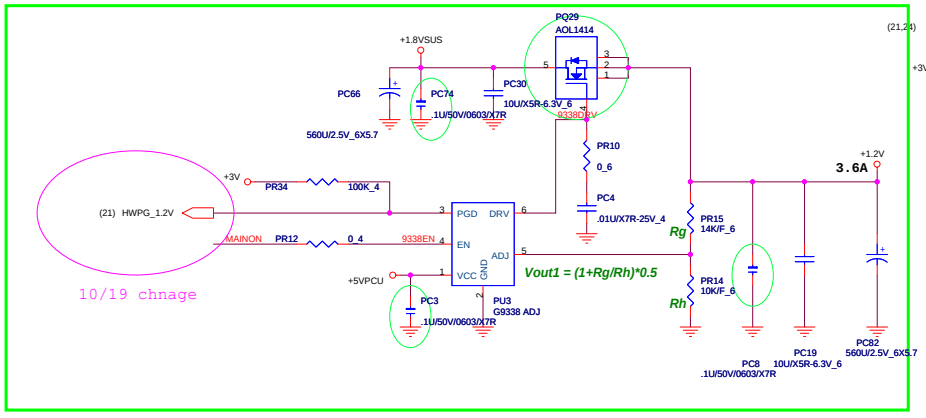

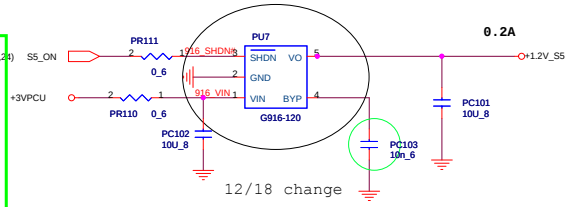

www.kythuatvitinh.com

PROJECT : ZO3
Quanta Computer Inc.

Size	Document Number	Rev
C	SC471/ 1.2V	A

Date: Wednesday, April 25, 2007 Sheet 26 of 30

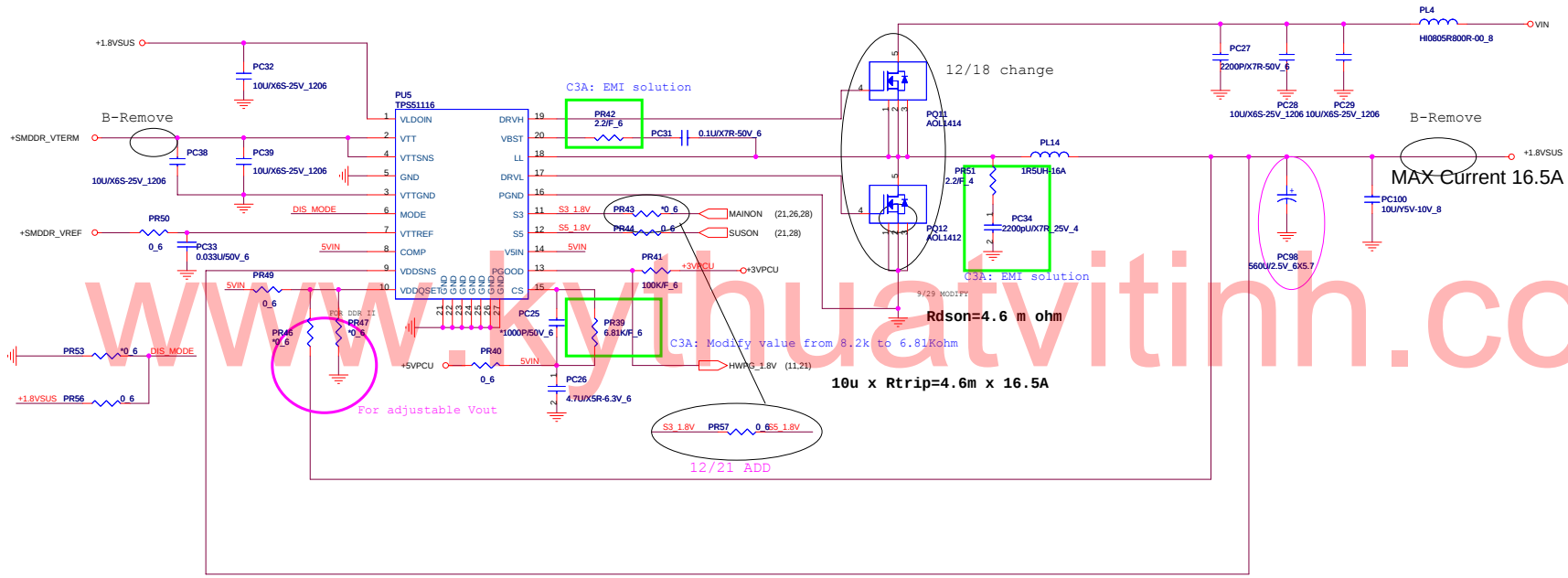

www.kythuatvitinn.com

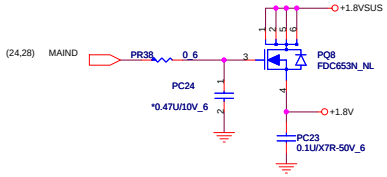

MAX Current 3.5A

PROJECT : ZO3
Quanta Computer Inc.

Size	Document Number	Rev
C	TPS51116 DDR	A

Date: Wednesday, April 25, 2007 Sheet 27 of 30

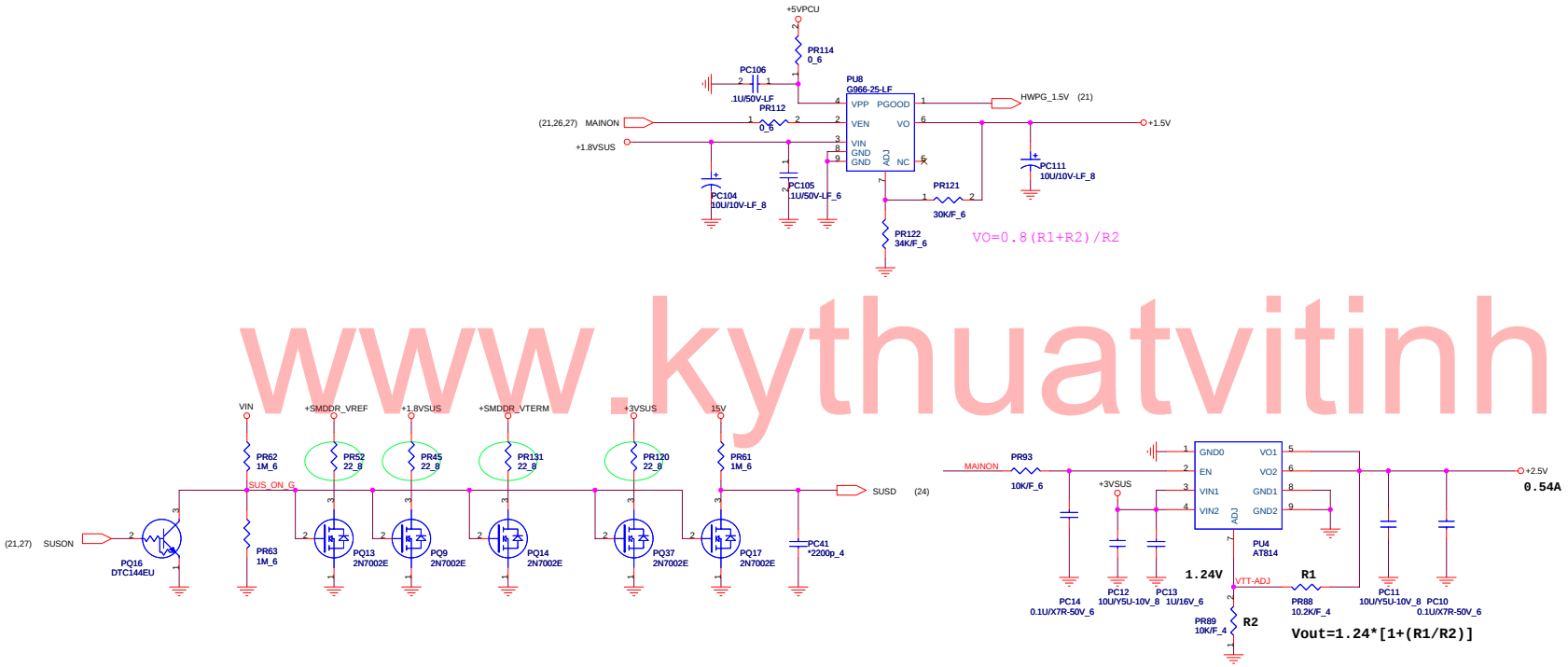

www.kythuatvitinh.com

PROJECT : ZO3		
Quanta Computer Inc.		
Size C	Document Number: DISCHARGER & LDO	Rev A
Date: Wednesday, April 25, 2007	Sheet 28 of 30	