5A Low Dropout Regulator with Enable

Features

- **Adjustable Output Low to 0.8V**
- **Input Voltage as Low as 1.1V and VPP Voltage 5V**
- **200mV Dropout @ 5A, VO 1.2V**
- **Over Current and Over Temperature Protection**
- **Enable Pin**
- **Low Reverse Leakage (Output to Input)**
- **Power SOP-8 (FD) Packages with Thermal Pad**
- **±2% Output Voltage**
- **VO Power OK Signal**
- **VO Pull Low Resistance when Disable**
- **VO Soft Start when Enable**

Applications

- **Motherboards**
- **Peripheral Cards**
- **Network Cards**
- **Set Top Boxes**
- **Notebook Computers**

General Description

The G972 is a high performance positive voltage regulator designed for use in applications requiring very low Input voltage and very low dropout voltage at up to 5 amps. It operates with VPP voltage 5V and output voltage programmable as low as 0.8V. The G972 features ultra low dropout, ideal for applications where V_{OUT} is very close to V_{IN}. Additionally, the G972 has an enable pin to further reduce power dissipation while shutdown. The G972 provides excellent regulation over variations in line, load and temperature. The G972 provides a power OK signal to indicate if the voltage level of VO reaches 92% of its rating value.

The G972 is available in the power SOP-8 (FD) package. It is adjustable using external resistors.

Ordering Information

ORDER NUMBER	MARKING	TEMP. RANGE	PACKAGE (Green)
G972F11U	G972	-40°C~+85°C	SOP-8 (FD)

Note: F1: SOP-8 (FD)
1: Bonding Code
U: Tape & Reel

Pin Configuration

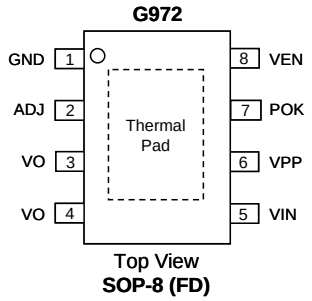

Top View
SOP-8 (FD)

* Thermal Pad can be connected to VIN
** Connect Thermal Pad to ground plate will have better thermal performance

Typical Application Circuit

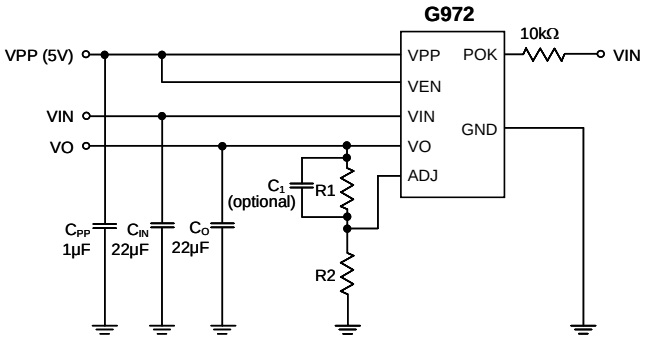

1. $VO = \frac{0.8\ (R1+R2)}{R2}$ Volts, R2<120kΩ is recommended
2. C_1 is not necessary. VO is also stable if C_1 = 22pF~150pF