SGS-THOMSON MICROELECTRONICS

TEA2025B
TEA2025D

STEREO AUDIO AMPLIFIER

- DUAL OR BRIDGE CONNECTION MODES
- FEW EXTERNAL COMPONENTS
- SUPPLY VOLTAGE DOWN TO 3V
- HIGH CHANNEL SEPARATION
- VERY LOW SWITCH ON/OFF NOISE
- MAX GAIN OF 45dB WITH ADJUST EXTERNAL RESISTOR
- SOFT CLIPPING
- THERMAL PROTECTION
- $3V < V_{CC} < 15V$
- $P = 2 \bullet 1W$, $V_{CC} = 6V$, $R_L = 4\Omega$
- $P = 2 \bullet 2.3W$, $V_{CC} = 9V$, $R_L = 4\Omega$
- $P = 2 \bullet 0.1W$, $V_{CC} = 3V$, $R_L = 4\Omega$

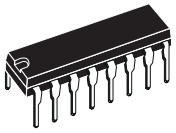

POWERDIP 12+2+2

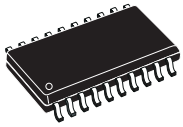

SO20 (12+4+4)

ORDERING NUMBERS: TEA2025B (PDIP)
TEA2025D (SO)

DESCRIPTION

The TEA2025B/D is a monolithic integrated circuit in 12+2+2 Powerdip and 12+4+4 SO, intended for use as dual or bridge power audio amplifier portable radio cassette players.

ABSOLUTE MAXIMUM RATINGS

Symbol	Parameter	Test Conditions	Unit
V_S	Supply Voltage	15	V
I_O	Ouput Peak Current	1.5	A
T_J	Junction Temperature	150	°C
T_{stg}	Storage Temperature	150	°C

BLOCK DIAGRAM

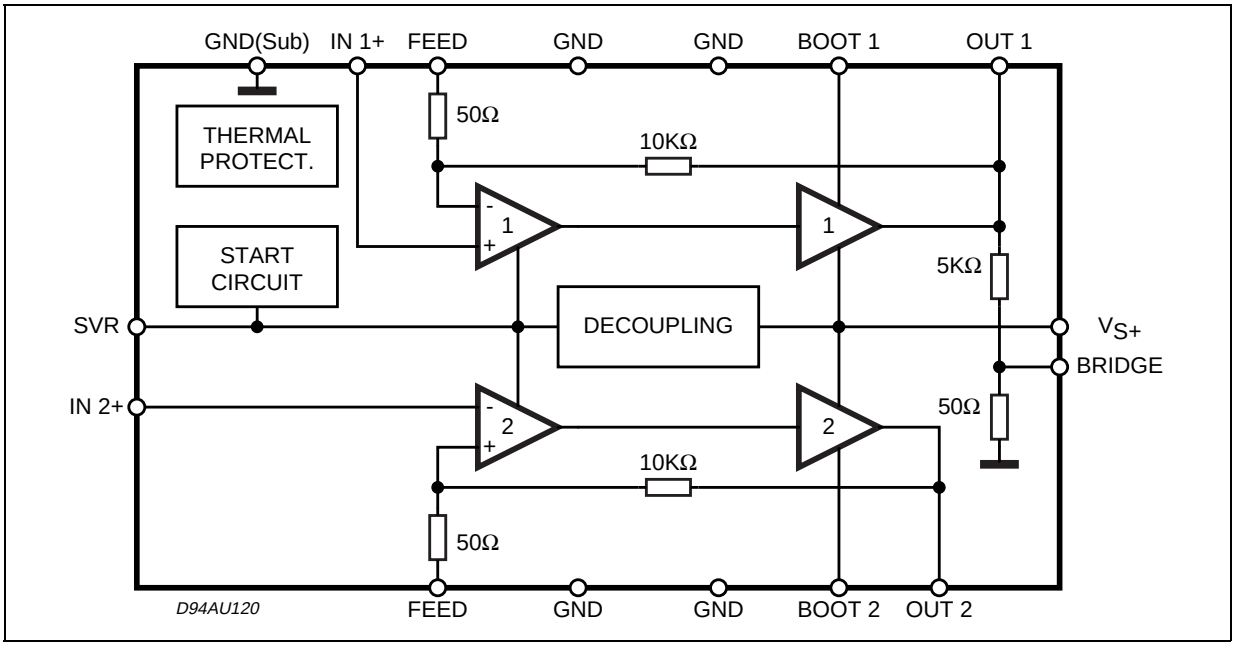

POWERDIP 12+2+2 PIN CONNECTION (Top view)

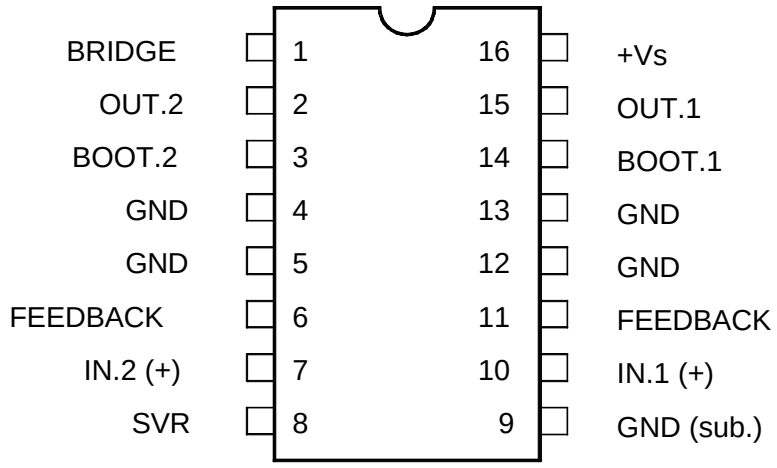

SO 12+4+4 PIN CONNECTION (Top view)

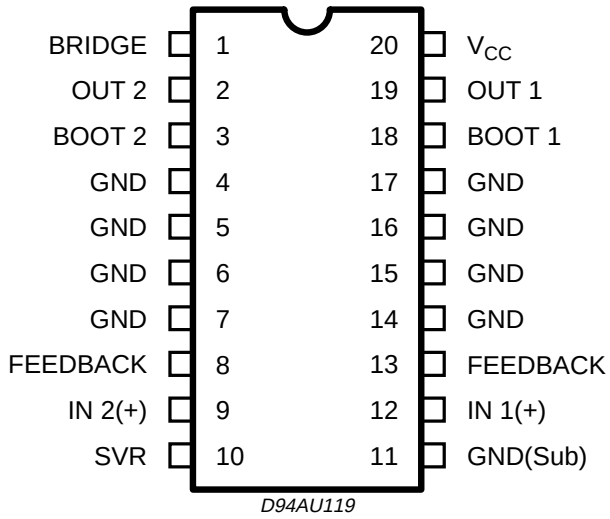

THERMAL DATA

Symbol	Description		SO 12+4+4 (*)	PDIP 12+2+2 (**)	Unit
$R_{th\ j\text{-}case}$	Thermal Resistance Junction-case	Max	15	15	°C/W
$R_{th\ j\text{-}amb}$	Thermal Resistance Junction-ambient	Max	65	60	°C/W

(*) The $R_{th\ j\text{-}amb}$ is measured with 4sq cm copper area heatsink

(**) The $R_{th\ j\text{-}amb}$ is measured on devices bonded on a 10 x 5 x 0.15cm glass-epoxy substrate with a 35µm thick copper surface of 5 cm^2.

ELECTRICAL CHARACTERISTICS (T_{amb} = 25°C, V_{CC} = 9V, Stereo unless otherwise specified)

Symbol	Parameter	Test Conditions			Min.	Typ.	Max.	Unit
V_S	Supply Voltage				3		12	V
I_Q	Quiescent Current					35	50	mA
V_O	Quiescent Output Voltage					4.5		V
A_V	Voltage Gain	Stereo Bridge			43 49	45 51	47 53	dB
ΔA_V	Voltage Gain Difference						±1	dB
R_j	Input Impedance					30		KΩ
PO	Output Power (d = 10%)	Stereo 8 (per channel)	9V	4Ω	1.7	2.3		W
			9V	8Ω		1.3		
			6V	4Ω	0.7	1		
			6V	8Ω		0.6		
			6V	16Ω		0.25		
			6V	32Ω		0.13		
			3V	4Ω		0.1		
			3V	32Ω		0.02		
			12V	8Ω		2.4		
		Bridge	9V	8Ω		4.7		W
			6V	4Ω		2.8		
			6V	8Ω		1.5		
			3V	16Ω		0.18		
			3V	32Ω		0.06		
d	Distortion	Vs = 9V; R_L = 4Ω	Stereo Bridge			0.3 0.5	1.5	%
SVR	Supply Voltage Rejection	f = 100Hz, V_R = 0.5V, R_g = 0			40	46		dB
$E_{N(IN)}$	Input Noise Voltage	R_G = 0 R_G = 10 4Ω				1.5 3	3 6	mV
CT	Cross-Talk	f = 1KHz, R_g = 10KΩ			40	52		dB

Term. N° (PDIP)	1	2	3	4	5	6	7	8	9	10	11	12	13	14	15	16
DC VOLT (V)	0.04	4.5	8.9	0	0	0.6	0.04	8.5	0	0.04	0.6	0	0	8.9	4.5	9

Figure 1: Bridge Application (Powerdip)

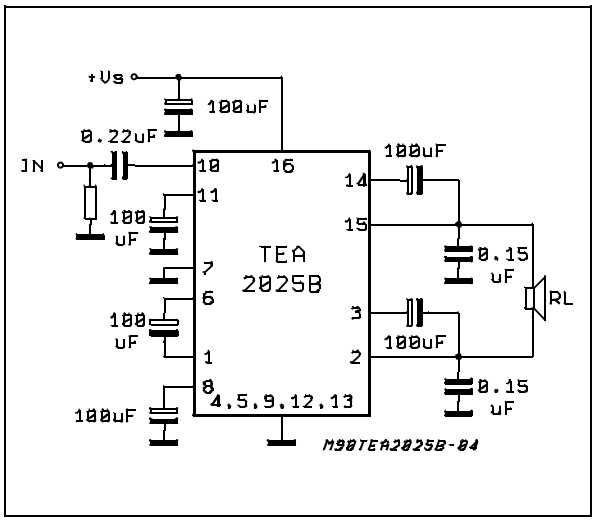

Figure 2: Stereo Application (Powerdip)

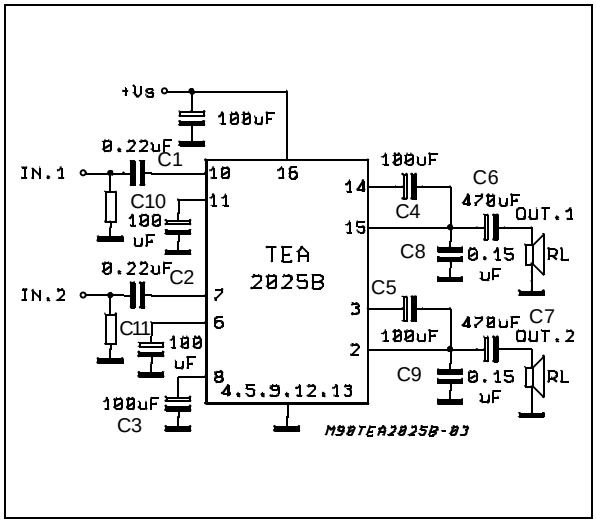

Figure 3: Supply Current vs. Supply Voltage ($R_L = 4\Omega$)

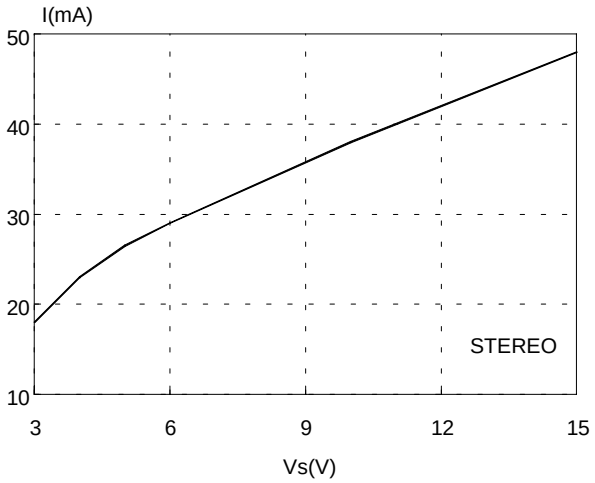

Figure 4: Output Voltage vs. Supply Voltage

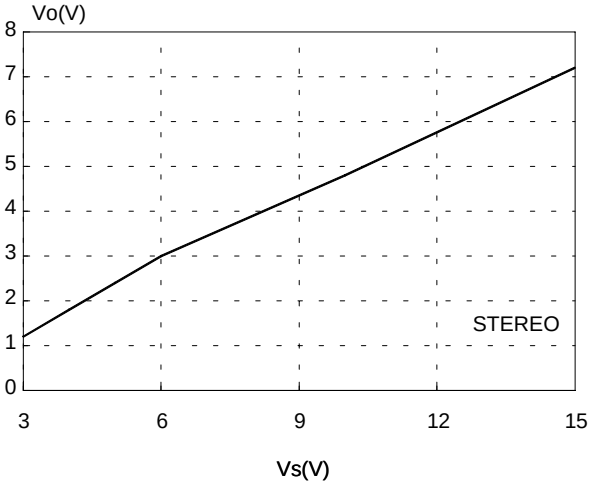

Figure 5: Output Power vs. Supply Voltage (THD = 10%, f = 1KHz)

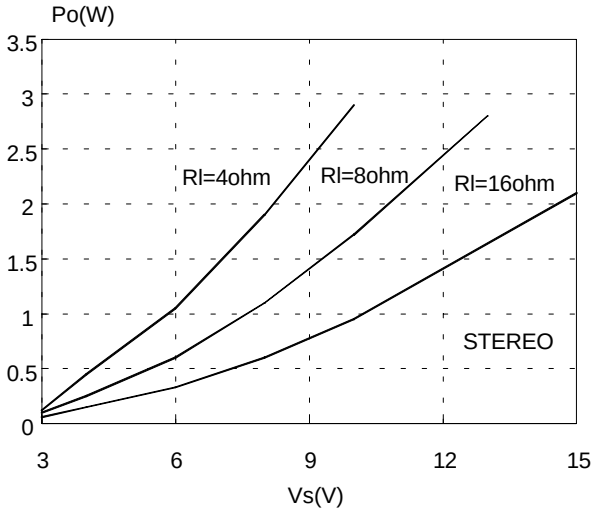

Figure 6: THD versus Output Power ($f = 1KHz$, $V_S = 6V$)

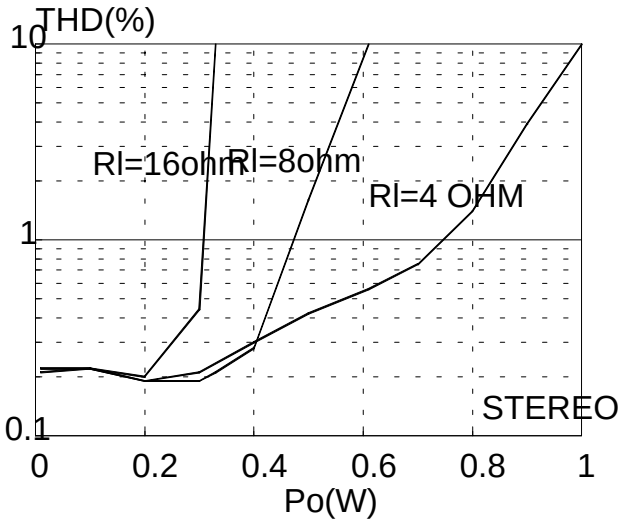

APPLICATION INFORMATION

Input Capacitor

Input capacitor is PNP type allowing source to be referenced to ground.

In this way no input coupling capacitor is required. However, a series capacitor (0.22 uF)to the input side can be useful in case of noise due to variable resistor contact.

Bootstrap

The bootstrap connection allows to increase the output swing.

The suggested value for the bootstrap capacitors (100uF) avoids a reduction of the output signal also at low frequencies and low supply voltages.

Voltage Gain Adjust

STEREO MODE

The voltage gain is determined by on-chip resistors R1 and R2 together with the external RfC1 series connected between pin 6 (11) and ground.

The frequency response is given approximated by:

$$\frac{V_{OUT}}{V_{IN}} = \frac{R1}{Rf + R2 + \frac{1}{JWC1}}$$

With Rf=0, C1=100 uF, the gain results 46 dB with pole at f=32 Hz.

THE purpose of Rf is to reduce the gain. It is recommended to not reduce it under 36 dB.

BRIDGE MODE

Figure 7

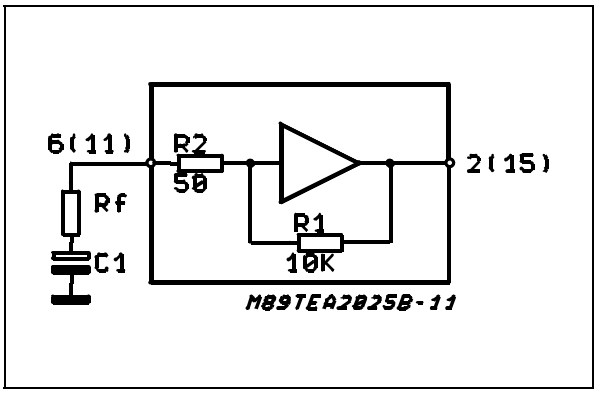

The bridge configuration is realized very easily thanks to an internal voltage divider which provides (at pin 1) the CH 1 output signal after reduction. It is enough to connect pin 6 (inverting input of CH 2) with a capacitor to pin 1 and to connect to ground the pin 7.

The total gain of the bridge is given by:

$$\frac{V_{OUT}}{V_{IN}} = \frac{R1}{Rf+R2+\frac{1}{JWC1}}\left(1+\frac{R3}{R4}\frac{R1}{R2+R4+\frac{1}{JWC1}}\right)$$

and with the suggested values (C1 = C2 = 100 µF, Rf= 0) means:

Gv = 52 dB

Figure 8

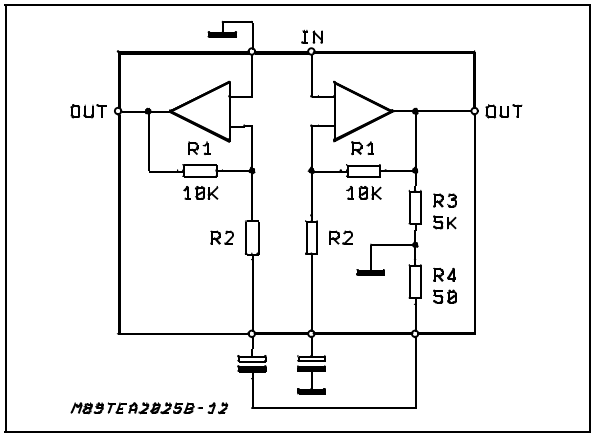

with first pole at f = 32 Hz

Output Capacitors.

The low cut off frequency due to output capacitor depending on the load is given by:

$$F_L = \frac{1}{2\,\Pi C_{OUT} \bullet R_L}$$

with C_{OUT} 470µF and R_L = 4 ohm it means F_L = 80 Hz.

Pop Noise

Most amplifiers similar to TEA 2025B need external resistors between DC outputs and ground in order to optimize the pop on/off performance and crossover distortion.

Figure 9

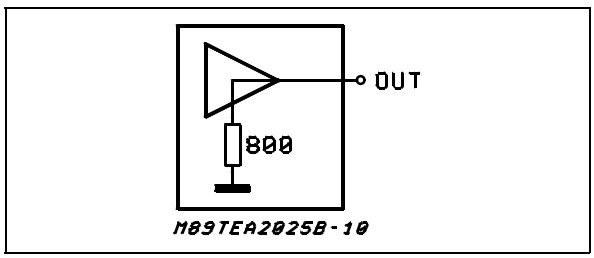

The TEA 2025B solution allows to save components because of such resistors (800 ohm)are included into the chip.

Stability

A good layout is recommended in order to avoid oscillations.

Generally the designer must pay attention on the following points:

- Short wires of components and short connections.
- No ground loops.
- Bypass of supply voltage with capacitors as nearest as possible to the supply I.C.pin.The low value(poliester)capacitors must have good temperature and frequency characteristics.
- No sockets.

2) the heatsink can have a smaller factor of safety compared with that of a conventional circuit. There is no device damage in the case of excessive junction temperature: all that happens is that P_O (and therefore P_{tot}) and Id are reduced.

APPLICATION SUGGESTION

The recommended values of the components are those shown on stereo application circuit of Fig. 2 different values can be used, the following table can help the designer.

COMPONENT	RECOMMENDED VALUE	PURPOSE	LARGER THAN	SMALLER THAN
C1,C2	0.22µF	INPUT DC DECOUPLING IN CASE OF SLIDER CONTACT NOISE OF VARIABLE RESISTOR		
C3	100µF	RIPPLE REJECTON		DEGRADATION OF SVR, INCREASE OF THD AT LOW FREQUENCY AND LOW VOLTAGE
C4,C5	100µF	BOOTSTRAP		
C6,C7	470µF	OUTPUT DC DECOUPLING		INCREASE OF LOW FREQUENCY CUT-OFF
C8,C9	0.15µF	FREQUENCY STABILITY		DANGER OF OSCILLATIONS
C10, C11	100µF	INVERTING INPUT DC DECOUPLING		INCREASE OF LOW FREQUENCY CUT-OFF

SO20 PACKAGE MECHANICAL DATA

DIM.	mm			inch		
	MIN.	TYP.	MAX.	MIN.	TYP.	MAX.
A			2.65			0.104
a1	0.1		0.3	0.004		0.012
a2			2.45			0.096
b	0.35		0.49	0.014		0.019
b1	0.23		0.32	0.009		0.013
C		0.5			0.020	
c1	45 (typ.)					
D	12.6		13.0	0.496		0.512
E	10		10.65	0.394		0.419
e		1.27			0.050	
e3		11.43			0.450	
F	7.4		7.6	0.291		0.299
L	0.5		1.27	0.020		0.050
M			0.75			0.030
S	8 (max.)					

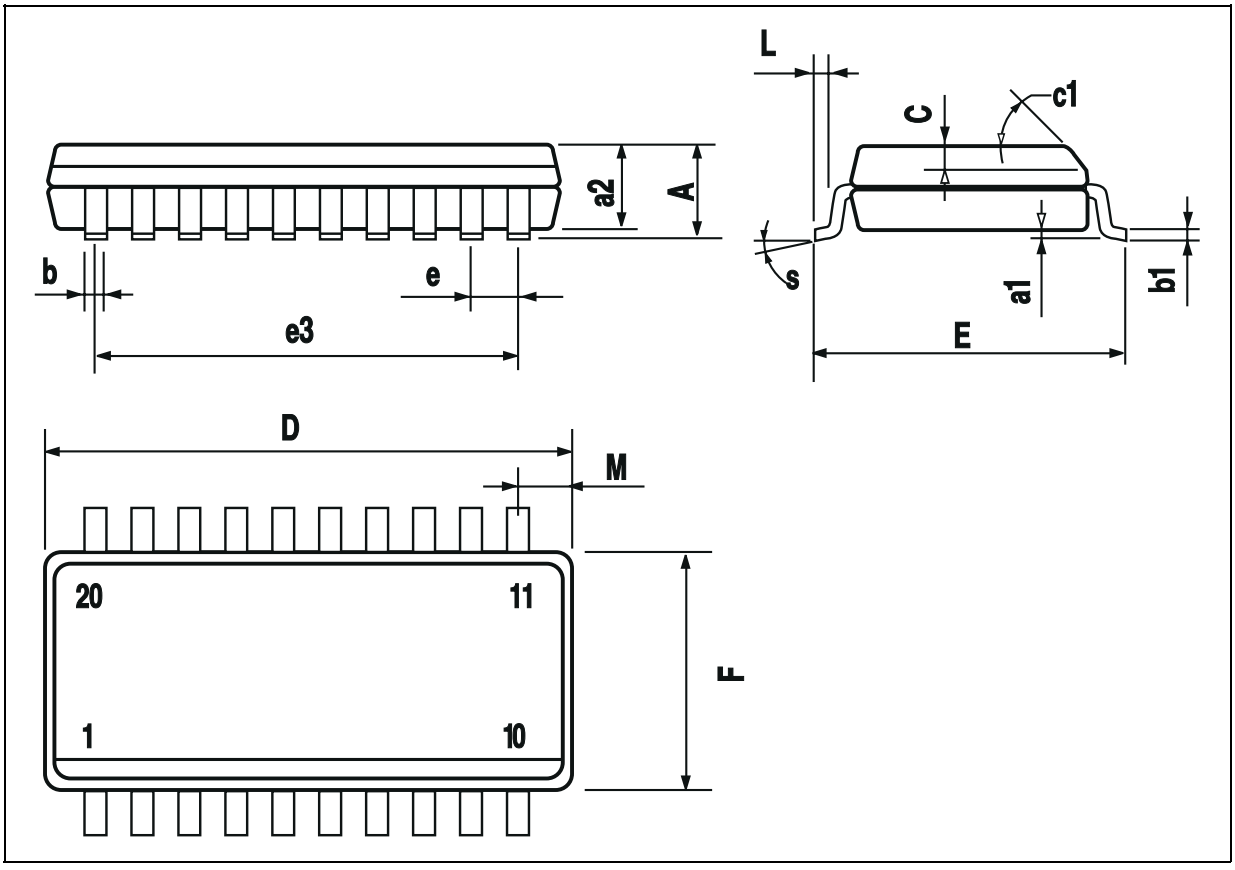

DIP16 PACKAGE MECHANICAL DATA

DIM.	mm			inch		
	MIN.	TYP.	MAX.	MIN.	TYP.	MAX.
a1	0.51			0.020		
B	0.85		1.40	0.033		0.055
b		0.50			0.020	
b1	0.38		0.50	0.015		0.020
D			20.0			0.787
E		8.80			0.346	
e		2.54			0.100	
e3		17.78			0.700	
F			7.10			0.280
I			5.10			0.201
L		3.30			0.130	
Z			1.27			0.050

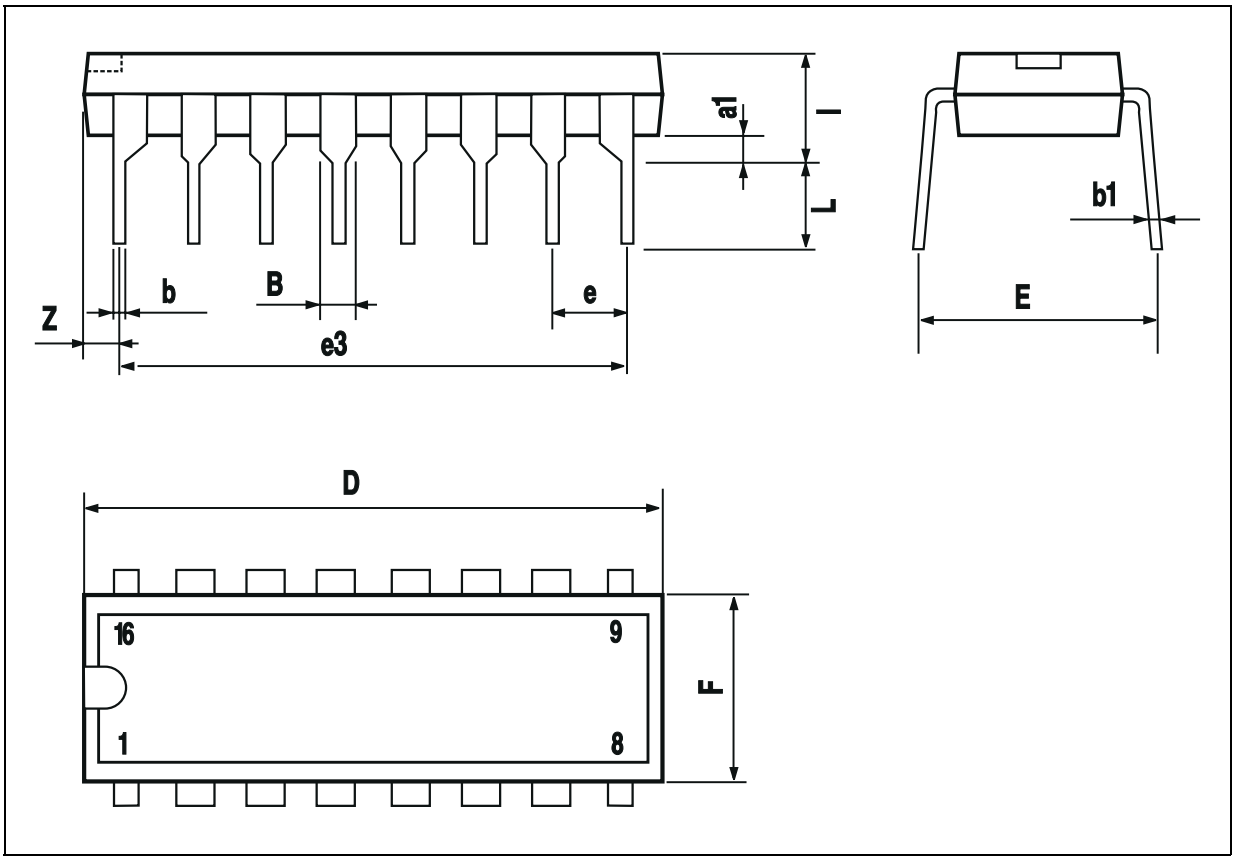

Information furnished is believed to be accurate and reliable. However, SGS-THOMSON Microelectronics assumes no responsibility for the consequences of use of such information nor for any infringement of patents or other rights of third parties which may result from its use. No license is granted by implication or otherwise under any patent or patent rights of SGS-THOMSON Microelectronics. Specifications mentioned in this publication are subject to change without notice. This publication supersedes and replaces all information previously supplied. SGS-THOMSON Microelectronics products are not authorized for use as critical components in life support devices or systems without express written approval of SGS-THOMSON Microelectronics.

© 1994 SGS-THOMSON Microelectronics - All Rights Reserved

SGS-THOMSON Microelectronics GROUP OF COMPANIES

Australia - Brazil - France - Germany - Hong Kong - Italy - Japan - Korea - Malaysia - Malta - Morocco - The Netherlands - Singapore - Spain - Sweden - Switzerland - Taiwan - Thaliand - United Kingdom - U.S.A.

This datasheet has been download from:

www.datasheetcatalog.com

Datasheets for electronics components.